Made in Italy

Glem Graziosa 90cm Stainless Steel Cookers

Choice of Dual Fuel or All Gas

GL965EI
Fan forced electric oven

GL965MVI
Fan assisted gas oven

Big Family cookers each with a 132 litre oven

The biggest oven cavity in the Glem range. Ideal for multi level cooking and multi batch cooking. Never worry about the size of your oven again.
A cooktop with wide open spaces for even the largest pots. There is a high power triple ring wok burner right through to a small simmer burner to cater for all cooking tasks. Best of all, there are flame failure safety devices fitted to every burner. The flame goes out? The gas stops flowing.

Gas or Electric?

Gas ia a moist heat. Roasting using gas makes a big difference, reducing shrinkage and maximising moisture left in the meat after cooking. Roasts are more succulent and flavoursome, and pastries tend to stay fresher longer. There is also the added advantage of simple 10amp plug in connection.

If the electric oven is the choice then the fan forced oven on the Gaziosa has been designed with ease of use in mind so the whole family can cook with confidence. It requires a 15 amp plug in connection and like the gas model it also comes with a full LPG conversion kit.

The Italian made family cooker

GLEM

Made in Italy

Room for the biggest meals.

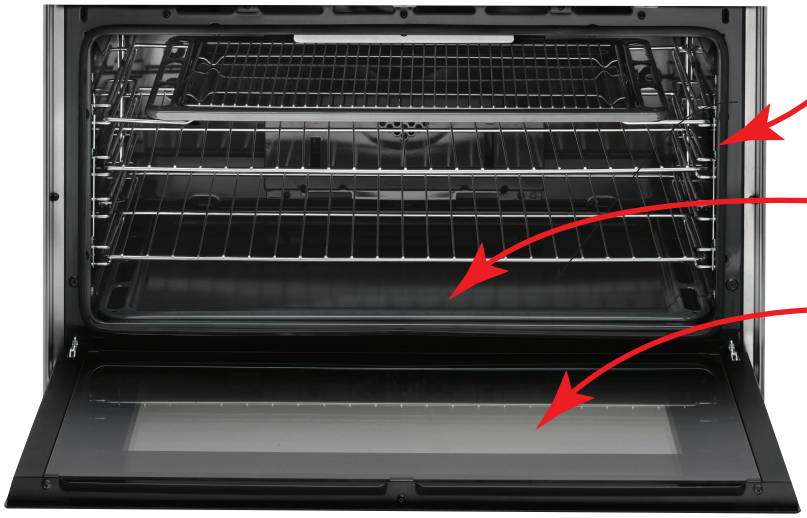

Designed for cooking

CHROME SIDE RACKS
Other cookers let the racks slide directly on the enamel surface which damages the surface. The side racks simply snap out for easy cleaning.

TITANIUM ENAMEL OVEN INTERIOR
The oven interior is coated in Titanium enamel. The non porous finish makes the oven much easier to clean.

FULL GLASS INNER DOOR
The double glass door has a large window and the inner glass is removable for easy cleaning.

GRAZIOSA SERIES COOKER FEATURES
All Models

FLAME FAILURE PROTECTION
Thermocouples stop the flow of gas in the event of an accidental flame failure.

TRIPLE RING BURNER
The triple ring flame provides efficient and fast heat for high power cooking.

LIGHT & STRONG STEEL TRIVETS
Lighter weight - heavy duty trivets that securely locate into the cooktop.

ELECTRONIC AUTOMATIC IGNITION
Simply rotate the control knob and press for instant ignition.

STAINLESS STEEL LEGS
Adjustable to match a bench height from 890 to 920mm

TANGENTIAL COOLING FAN
Hot air is expelled from the cooker lower temperature on external surfaces.

DIGITAL CLOCK AND TIMER
Shows time of day and can be used as a timer during cooking

GL965EI
Mulifunction Electric oven functions

FAN FORCED
Fast heat up and rapid cooking from a circular element around a fan that pushes the heat through for maximum efficiency.

FAN ASSISTED ELECTRIC GRILL
The grill element operates with fan assistance which is excellent for thicker cuts of meat.

GRILL
Closed door grilling for improved efficiency and cooking smell retention.

OVEN LIGHT

15 AMP PLUG
IN CONNECTION

GL965MVI
Fan Assisted Gas Oven Functions

STATIC GAS
Gas baking without fan assistance for those times when you don't want air movement in the oven.

FAN ASSISTED GAS OVEN
Gas baking with fan assistance. Eliminates cold spots when cooking on more than one shelf. Great even heat distribution.

ELECTRIC GRILL
Closed door grilling for improved efficiency and cooking smell retention.

FAS ASSISTED ELECTRIC GRILL
The grill element operates with fan assistance which is excellent for thicker cuts of meat.

OVEN LIGHT

10 AMP PLUG
IN CONNECTION

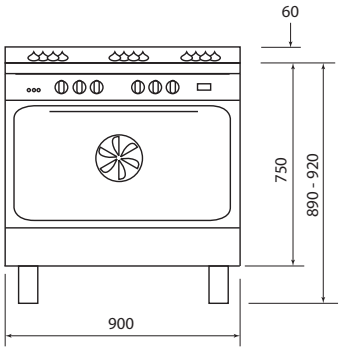

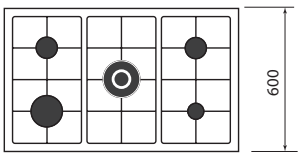

MADE IN ITALY · 2 · TWO YEAR WARRANTY

GLEM

GLEM GAS Australasia
Unit 26,10 Straits Avenue,
South Granville, NSW 2142
PO BOX 63 Blaxcell PO,
South Granville, NSW 2142
T: 1300 307 917
T: (02) 9721 2755
F: (02) 9721 2766
E: info@glemgas.com.au
W: www.glemgas.com.au

The descriptions and images in this brochure apply to the specific products at the date of publication. Glem Gas has a policy of continuous product development and product specifications may change without notice. Please check with the retailer that this brochure correctly describes the products that are being offered for sale. Glem Gas should not be held responsible for any errors in this brochure caused by inaccuracy in printing or transcription.

Warranty: Glem products are covered by a two year warranty, on parts and labour and conditional to our Warranty policy.

Service: Glem Gas has an Australia wide service network available. Call 02 9721 2755 for assistance.