GLEM

BUILT

BUILT-IN

BUILT-IN

2 *Glem*
10 **OVENS**
25 **COMPACT OVENS**
29 **MICROWAVE OVENS**
30 **INDUCTION HOBS**
34 **CERAMIC GLASS HOBS**
40 **CRYSTAL GAS HOBS**
44 **GAS HOBS**
58 **DOMINO HOBS**
66 **HOODS**
75 *Tech info*

Glem World

PROJECT *and* EMOTION MADE *in* ITALY

Glem brand belongs to Glem Gas group established in 1959 in San Cesario, a few kilometers from Modena, in the heart of Emilia and of this territory it proudly carries on the culinary excellence, the artistic tradition, the spirit of innovation and the craftsmanship of its people. The technological and aesthetic content of our products represents our absolute value, a rigorous and emblematic image of **Made in Italy**. All products Made in Italy are assembled in our local premises and are submitted to strict quality controls so as to grant excellent performances.

Glem Experience

IO CUCINO *con* GLEM

I cook with Glem

"I cook with Glem" encapsulates our renewed identity, based on an impressive heritage of values for sharing, with the product at the centre of episodes from life and personal stories just waiting to be told. Investigating people's experience of using our products every day places the spotlight on our audience in its dialogue with us through social media interaction.

Share your experience

www.glemgas.com

Io Cucino
con
GLEM
MADE IN ITALY

Glem Style

GLOBAL *and* SMART CITIZENS

We develop products according to the contemporary living, favouring materials and innovative shapes which grant charming aesthetic, ergonomic shapes, ease of use and maintenance. Our appliances become object of furniture able to perfectly adapt to the lastest fashion trends and interior design.
Pragmatism, experience and creativity are the ingredients which have enabled Glem to receive prestigious awards and praises in the design area.

DELL

PRH

PRH (PRE-HEATING)

The top models have a PRH (pre-heating) function that allows you to rapidly pre-heat the oven. The oven reaches the temperature of 200°C in few time, and thus reduces the total cooking time. The oven emits a tone when it reaches temperature, at which point you can set the cooking function you wish to use.

MODERN LOOK, HIGH PERFORMANCE

PIZZA

This special Pizza program allows you to cook pizzas at the exact same temperature as you would in a wood oven - evenly and in just a few minutes. This program is also perfect for baking fresh focaccia and bread.

MULTIFUNCTION GAS OVEN WITH FAN

Glem has created an innovative oven which combines all the features of a multifunction electric oven with those of a gas oven. The traditional cooking of a gas oven, ideal for roasting and baking, combined with fan forced ventilation provides a great heat distribution for single and multi-level cooking. More recipes prepared in less time and with less energy consumption.

PRESET TEMPERATURE

Thanks to the electronic control of the temperature, the oven will indicate the ideal preset temperature for each function. This function guarantees a constant temperature inside the cavity with optimal cooking results.

TANGENTIAL COOLING FAN

Tangential cooling means the oven remains cooler on the outside, to avoid heating the kitchen furniture or forming condensation. The tangential fan at the top of the oven starts up automaticallya few minuters after the oven is turned on, and a thermostat device ansures it continues to run after the oven is turned off until it has cooled down.

EASY *and* SAFE COOKING

TITANIUM ENAMEL - EASY TO CLEAN

Thanks to the low porosity of the titanium enamel, cleaning is so much easier and reduces dirt build up. The titanium enamel is resistant to the attack of acids and maintains its colour over time even after intensive use.

COLD DOOR

The external temperatures are reduced thanks to the new oven door. The innovative extraction chimney increases considerably the air flow circulation inside the oven so as to have external temperatures very low.

MULTICHEF (FAN SWITCH)

The Multichef allows you select between fan assisted or static cooking in gas ovens. This provides great versatility in cooking times and methods. Simply select the fan with the dedicated knob on the control panel to create perfect heat distribution inside the oven. The accurate and constant temperature of the oven browns dishes perfectly and allows you to cook more than one dish simultaneously, optimising the use of the space inside the oven.

FULL GLASS DOOR

The full glass oven inner door grants stength and solidity and it also faciltates the cleanliness since it is completely smooth.

Contemporaneo

GFP16IX

Performance and features

Multifunction oven
Full touch controls with electronic programmer
Preset temperature
64 lt oven capacity
Tangential cooling fan
Smooth sides with chromed racks
2 shelves position with telescopic rails

Functions: 13

Safety

Triple glass cold door

Details

Titanium enamelled cavity
Full flat glass inner door
Removable inner glass door

GFP16IX
Black glass / St. steel frame

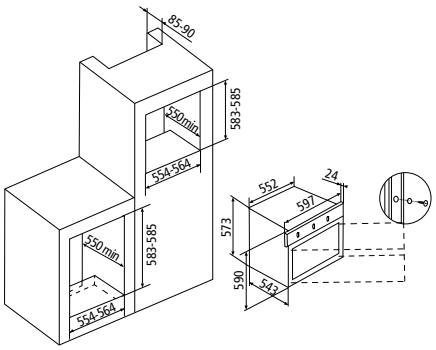

Contemporaneo

GFP13IX

Performance and features

Multifunction oven
Led display
Full touch electronic programmer
Preset temperature
64 lt oven capacity
Tangential cooling fan
Smooth sides with chromed racks
2 shelves position with telescopic rails

Functions: 11

Safety

Triple glass cold door

Details

Pop-out metal knobs
Titanium enamelled cavity
Full flat glass inner door
Removable inner glass door

GFP13IX
Black glass / St. steel frame

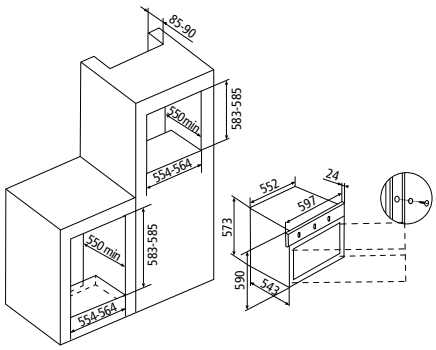

Contemporaneo

GFP93IX

Performance and features

Multifunction oven
Electronic touch programmer
64 lt oven capacity
Tangential cooling fan
Smooth sides with chromed racks
2 shelves position with telescopic rails

Functions: 9

Safety

Triple glass cold door

Details

Pop-out metal knobs
Titanium enamelled cavity
Full flat glass inner door
Removable inner glass door

GFP93IX
Black glass / St. steel frame

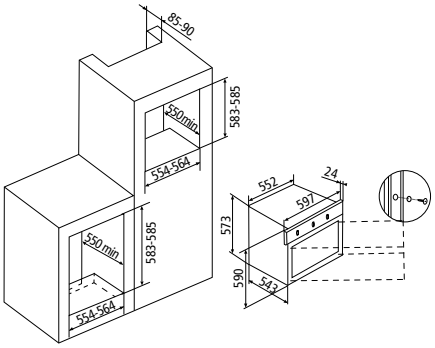

Stylish

GFS93IX

Performance and features

Multifunction oven
Electronic programmer
64 lt oven capacity
Tangential cooling fan
Smooth sides with chromed racks

Functions: 9

Safety

Triple glass cold door

Details

Titanium enamelled cavity
Full flat glass inner door
Removable inner glass door

GFS93IX
St. steel

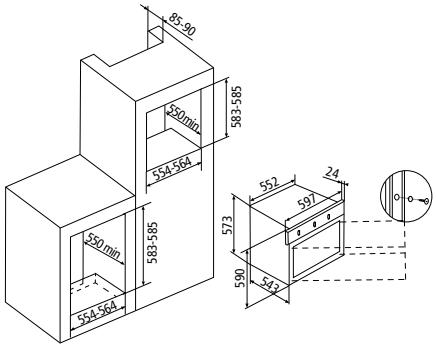

Stylish

GFS53IX

Performance and features

Multifunction oven
Electronic programmer
64 lt oven capacity
Tangential cooling fan
Smooth sides with chromed racks

Functions: 5

Safety

Triple glass cold door

Details

Titanium enamelled cavity
Full flat glass inner door
Removable inner glass door

GFS53IX
St. steel

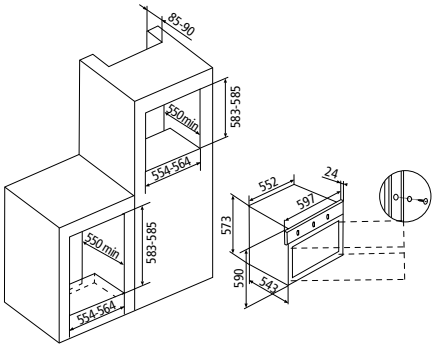

Stylish

GFS92IX

Performance and features

Multifunction oven
Timer 120' end of cooking
64 lt oven capacity
Tangential cooling fan
Smooth sides with chromed racks

Functions: 9

Safety

Triple glass cold door

Details

Titanium enamelled cavity
Full flat glass inner door
Removable inner glass door

GFS92IX
St. steel

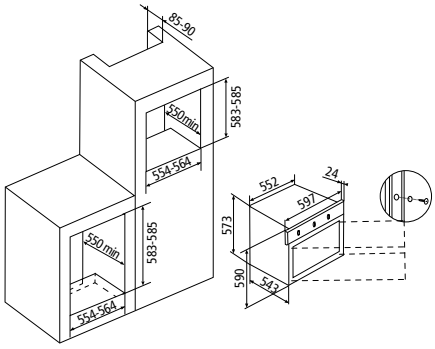

Stylish

GFS52IX

Performance and features

Multifunction oven
Timer 120′ end of cooking
64 lt oven capacity
Tangential cooling fan
Smooth sides with chromed racks

Functions: 5

Safety

Triple glass cold door

Details

Titanium enamelled cavity
Full flat glass inner door
Removable inner glass door

A 64 L T

GFS52IX
St. steel

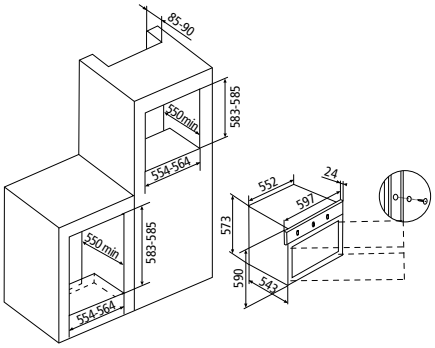

Excellence

GFEA93IX

Performance and features

Multifunction oven
Electronic programmer
64 lt oven capacity
Tangential cooling fan
Smooth sides with chromed racks

Functions: 9

Safety

Triple glass cold door

Details

Titanium enamelled cavity
Full flat glass inner door

A PRH 64 L T

GFEA93IX
St. steel

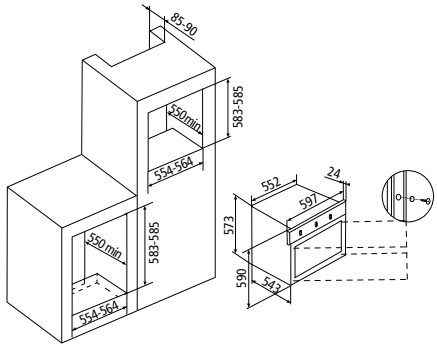

Excellence

GFE92IX

Performance and features

Multifunction oven
Timer 120′ end of cooking
64 lt oven capacity
Tangential cooling fan
Smooth sides with chromed racks

Functions: 9

Safety

Triple glass cold door

Details

Titanium enamelled cavity
Full flat glass inner door

GFE92IX
St. steel

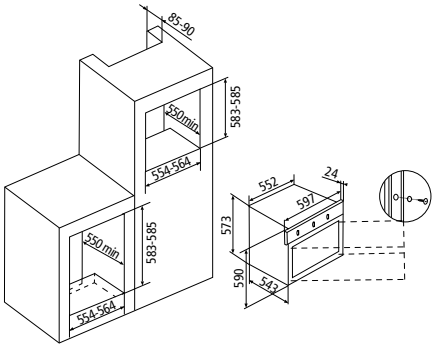

Excellence

GFE52IX

Performance and features

Multifunction oven
Timer 120′ end of cooking
64 lt oven capacity
Tangential cooling fan
Smooth sides with chromed racks

Functions: 5

Safety

Triple glass cold door

Details

Titanium enamelled cavity
Full flat glass inner door

GFE52IX
St. steel

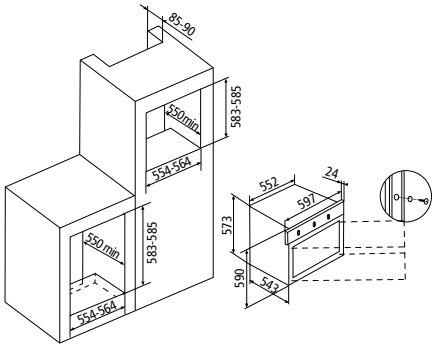

Excellence

GFEV21IX

Performance and features

Multifunction gas oven with fan
Electric Grill
60’ Minute minder
63 lt oven capacity
Turnspit
Tangential cooling fan
Smooth sides with chromed racks

Functions: 6

Safety

Triple glass cold door

Details

Titanium enamelled cavity
Full flat glass inner door

A 63 L T

GFEV21IX
St. steel

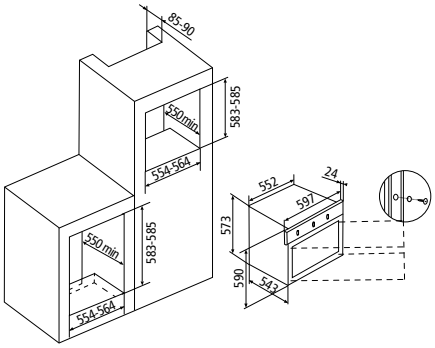

Excellence

GFEW21IX

Performance and features

Multifunction gas oven with fan
Gas Grill
60’ Minute minder
60 lt oven capacity
Turnspit
Tangential cooling fan
Smooth sides with chromed racks

Functions: 7

Safety

Triple glass cold door

Details

Titanium enamelled cavity
Full flat glass inner door

A 60 L T

GFEW21IX
St. steel

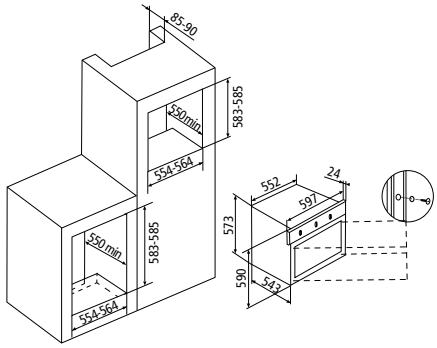

Excellence

GFEG21IX

Performance and features

Gas oven
Gas Grill
60′ Minute minder
66 lt oven capacity
Turnspit
Tangential cooling fan
Smooth sides with chromed racks

Functions: 5

Safety

Triple glass cold door

Details

Titanium enamelled cavity
Full flat glass inner door

A 66 L T

GFEG21IX
St. steel

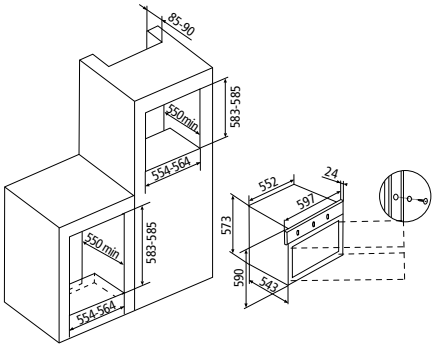

Metropol

GFM52IX

Performance and features

Multifunction oven
Timer 120′ end of cooking
60 lt oven capacity
Tangential cooling fan

Functions: 5

Details

Titanium enamelled cavity
Full flat glass inner door

GFM52WH

GFM52BK

A 60 L T

GFM52IX
St. steel

GFM52WH
White

GFM52BK
Black

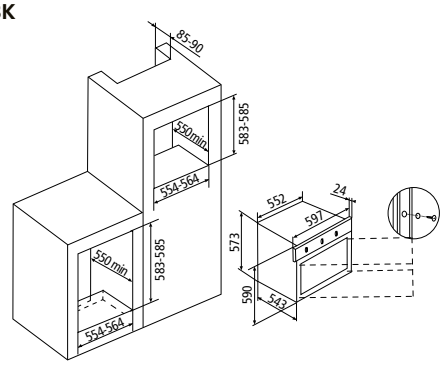

Metropol

GFMF21IX

Performance and features

Gas oven
Electric Grill
60′ Minute minder
65 lt oven capacity
Turnspit
Tangential cooling fan

GFMF21WH

Functions: 5

Details

Titanium enamelled cavity
Full flat glass inner door

GFMF21BK

GFMF21IX
St. steel

GFMF21WH
White

GFMF21BK
Black

Metropol

GFMG21WH

Performance and features

Gas oven
Gas Grill
60′ Minute minder
62 lt oven capacity
Turnspit
Tangential cooling fan

GFMG21BK

Functions: 5

Details

Titanium enamelled cavity
Full flat glass inner door

GFMG21WH
White

GFMG21BK
Black

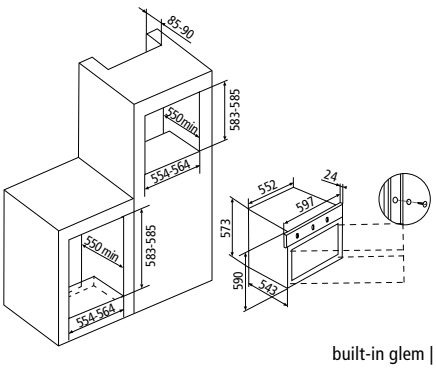

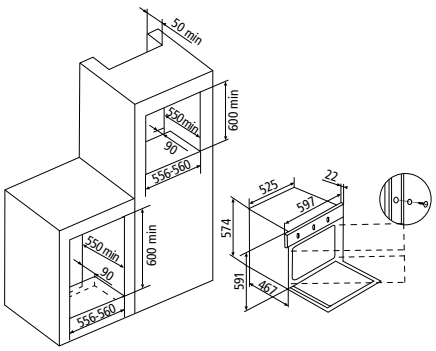

Excellence

GF9W21IXN

Performance and features
Multifunction gas oven with fan - 90 cm
Gas Grill
60’ Minute minder
88 lt oven capacity
Turnspit
Tangential cooling fan
Smooth sides with chromed racks

Functions: 10

Details

Full flat glass inner door

GF9W21IXN
St. steel

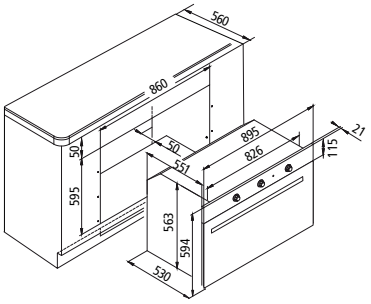

Excellence

GF9F21IXN

Performance and features
Gas oven - 90 cm
Electric Grill
60’ Minute minder
105 lt oven capacity
Turnspit
Tangential cooling fan
Smooth sides with chromed racks

GF9F21BKN

Functions: 5

Details

Full flat glass inner door

A 105 L

GF9F21IXN
St. steel

GF9F21BKN
Black

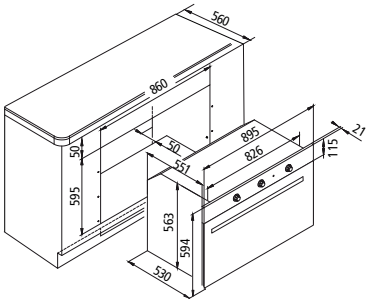

Excellence

GF9G21IXN

Performance and features
Gas oven - 90 cm
Gas Grill
60’ Minute minder
95 lt oven capacity
Turnspit
Tangential cooling fan
Smooth sides with chromed racks

GF9G21BKN

Functions: 5

Details

Full flat glass inner door

A 95 L

GF9G21IXN
St. steel

GF9G21BKN
Black

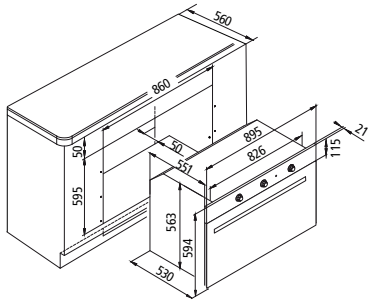

OVENS

Excellence

Contemporaneo

GF993IXN

Performance and features

Multifunction oven - 90 cm
Electronic programmer
89 lt oven capacity
Turnspit
Tangential cooling fan
Smooth sides with chromed racks

Functions: 9

*Available on grill functions

Safety

Triple glass cold door

Details

Full flat glass inner door

GF993IXN
St. steel

GFP993IX

Performance and features

Multifunction oven - 90 cm
Electronic touch programmer
89 lt oven capacity
Turnspit
Tangential cooling fan
Smooth sides with chromed racks

Functions: 9

Safety

Triple glass cold door

Details

Full flat glass inner door

GFP993IX
Black glass / St. steel frame

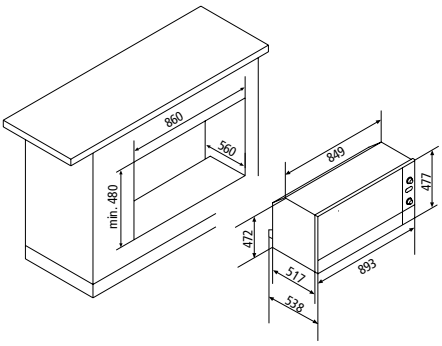

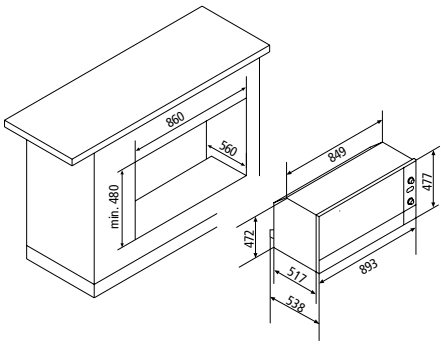

COMPACT OVENS

COMFORT *and* FUNCTIONALITY

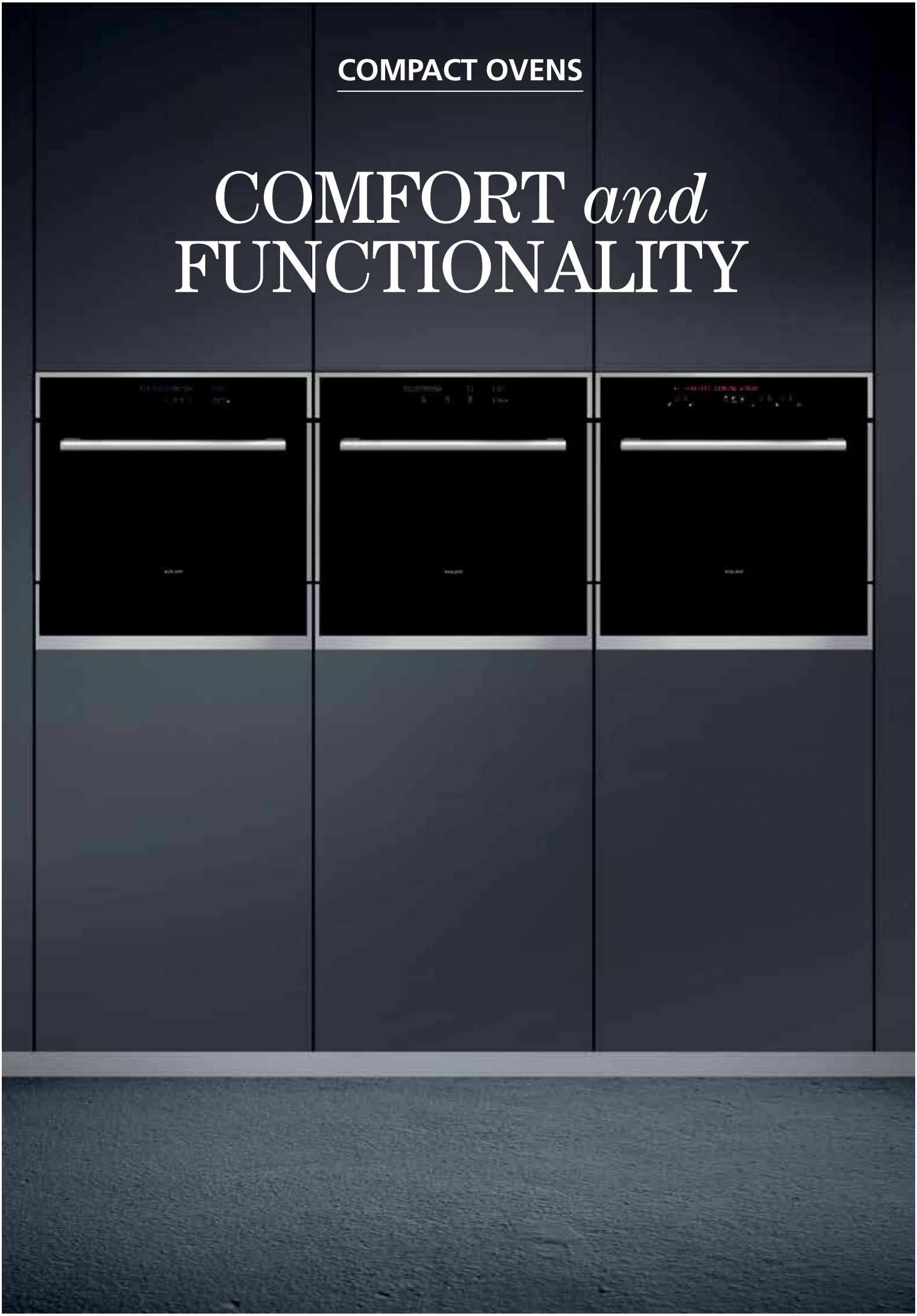

Contemporaneo

GMC66BK

Performance and features

Compact 45 cm combi microwave
Digital touch controls - red display
32 lt oven capacity
Tangential cooling fan
5 power levels
Digital clock
32 cm rotary glass plate
1 chromed grid
1 glass baking tray

Functions: 6
3 automatic recipes / 12 menu
Electronic timer 0 to 90' with sound signal
Defrosting by weight/time
Preset function

Safety

Triple glass cold door
Drop down quartz grill
Child safety lock

Details

St. steel oven cavity
Drop down door
Halogen lights

GMC66BK
Black glass / St. steel frame

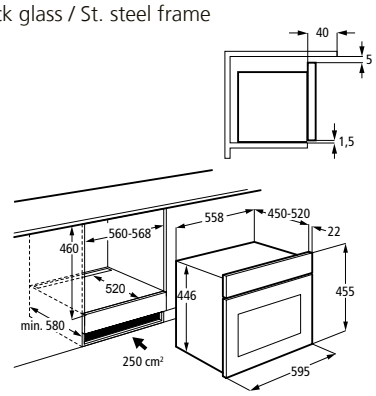

Contemporaneo

GFCS16BK

Performance and features

Compact 45 cm steam oven
Digital touch controls - red display
35 lt oven capacity
Tangential cooling fan
4 power levels
Digital clock
Water tank (1,4 lt)
Side racks (4 levels)

Functions: 5
3 automatic recipes /12 menu
Electronic timer 0 to 90' with sound signal
Defrosting by weight/time
Preset function

Safety

Child safety lock

Details

St. steel oven cavity
Drop down door

GFCS16BK
Black glass / St. steel frame

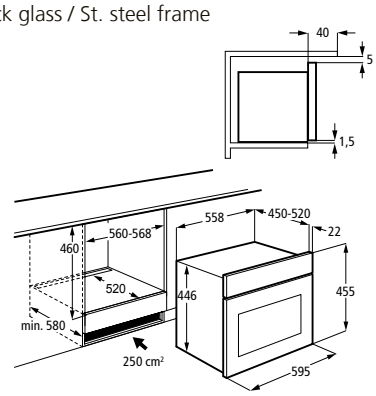

Contemporaneo

GFCS86BK

Performance and features

Compact 45 cm combi steam oven
Digital touch controls - red display
32 lt oven capacity
Tangential cooling fan
Water tank (1,4 lt)
Digital clock
3 temperatures levels
Side racks (4 levels)

Functions: 5
3 automatic recipes / 12 menu
Electronic timer 0 to 90' with sound signal
Defrosting by time
Preset function

Safety

Triple glass cold door
Child safety lock

Details

St. steel oven cavity
Drop down door

GFCS86BK
Black glass / St. steel frame

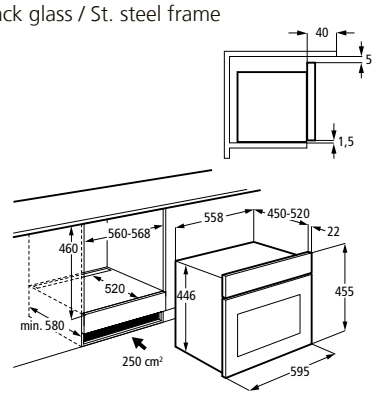

Contemporaneo

GFCM96BK

Performance and features

Compact 45 cm multifunction oven
Digital touch controls - red display
40 lt oven capacity
Tangential cooling fan
1 shelve position with telescopic rail
Easy to clean enamelled cavity

Functions: 9
Electronic touch programmer with red display
Preset function

Safety

Triple glass cold door

Details

Titanium enamelled cavity
Drop down door
Halogen lights

GFCM96BK
Black glass / St. steel frame

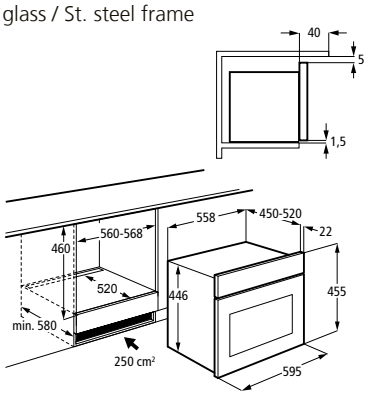

DRAWERS

Accessories

DRAWER

WARMING DRAWER

GFCDIXN - GFCWDIX

Performance and features

15 cm drawers
6 dish servings/settings
20 dinner plates (ø 28 cm)
Useful height 10 cm
Adjustable thermostat 30°-70° C
(available for warming drawers only)
Max power 430 W
(available for warming drawers only)

Safety

Thermal protection at 110° C
(available for warming drawers only)
Illuminated On/Off switch
(available for warming drawers only)

Details

St. steel drawer cavity
Push-pull opening system

DRAWER

GFCDIXN
Black / St. steel frame

WARMING DRAWER

GFCWDIX
Black / St. steel frame

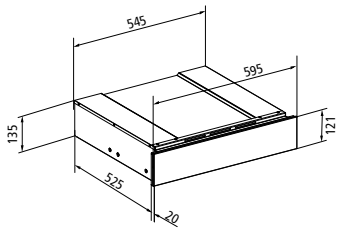

FUNCTIONS

OVEN LIGHT
It is operated utilizing the oven functions.

PIZZA
Ideal for cooking pizza.

PRE-HEATING
This time-saver preheats the oven approx. 30% faster by using all the heating elements at once.

TRADITIONAL COOKING
The heat is given by the bottom and upper oven elements. Ideal for pastry cooking and traditional recipes.

BOTTOM ELEMENT
Ideal for cooking pies and to give a final touch to the cooking.

BOTTOM ELEMENT WITH FAN
The heat of the bottom element is spread through the fan. Ideal for soufflés.

UPPER ELEMENT
This function allows direct cooking.
Very good for cooking au gratin.

STATIC + FAN
The heat given by the bottom and upper oven elements is spread through the fan.

UPPER ELEMENT + FAN
This function allows direct cooking.
Very good for cooking big pieces of meat.

GRILL
It is used to cook “au gratin”.
Ideal for cooking “thin” meat.

GRILL WITH FAN
The grill along with the fan spreads the heat in a homogenous way. It is ideal for cooking medium and very thick meat.

GRILL + TURNSPIT
Ideal for grilling.

DOUBLE GRILL
The grill along with the upper element allows grilling on wider areas.

DOUBLE GRILL WITH FAN
Ideal for grilling meat and for cooking fish.

MULTIFUNCTION (CIRCULAR + FAN)
The fan moves the hot air inside the oven, allowing homogeneous cooking on 3 levels, without spreading any smell.

DEFROSTING
The fan is operated without any element. It assures rapid defrosting in few minutes and in the best possible way.

LOW TEMP
The fan together with the preset temperature at 40 °C is ideal to defrost in low temperature or manteinig hot cooked dishes.

GAS
Traditional gas cooking.

GRILL GAS
Ideal for cooking with turnspit.

GRILL GAS WITH FAN
The fan spreads the heat produced by the grill gas in a homogeneous way. It is ideal for baking big pieces of meat.

GRILL GAS + TURNSPIT
Ideal for baking meats.

GRILL GAS WITH FAN + TURNSPIT
The grill gas with fan function is combined with turnspit.

GAS + TURNSPIT
Ideal for even cooking.

GAS WITH FAN
The fan spreads the heat produced by the gas burner in a homogeneous way.

GAS WITH FAN + TURNSPIT
The gas with fan function is combined with turnspit.

GMI253IX

Performance and features

Built-in microwave
Digital controls
25 lt oven capacity
Maximum power: 900 W
Grill power: 1000 W
5 power levels
Digital clock
Rack to cook "au gratin"
31,5 cm rotary plate

Functions

Electronic timer 0 to 95' with sound signal
Defrosting by weight/time

Safety

Child safety lock

Details

St. steel oven cavity

38 cm

GMI253IX
St. steel

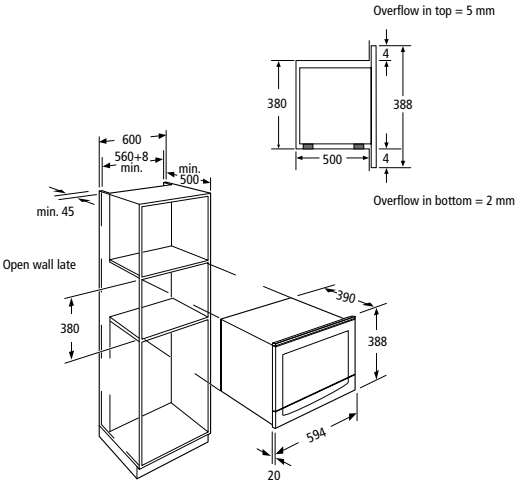

GMI203IX

Performance and features

Built-in microwave with grill
Easy-tronic controls
20 lt oven capacity
Maximum power: 800 W
Grill power: 1000 W
5 power levels
Digital clock
24,5 cm rotary plate

Functions

Digital timer 95'
Defrosting by weight/time

Safety

Child safety lock

Details

St. steel oven cavity

38 cm

GMI203IX
St. steel

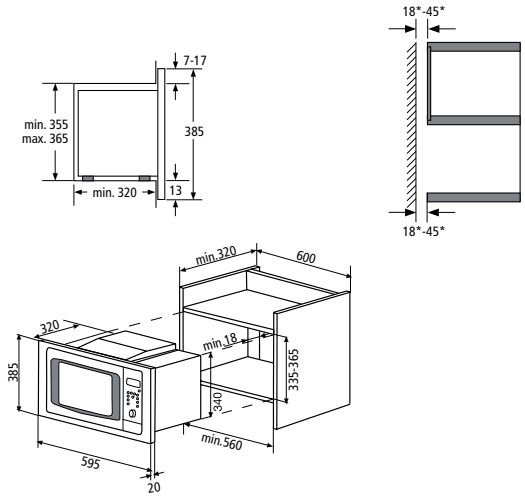

TIMER

The Timer function allows you to program the cooking time: when the period of time elapses, the burner turns off automatically.

BOOSTER

When you need to save time and get cooking faster, you can use the booster function. It gives you an extra burst of energy that quickly heats your pan, and its contents, to the highest temperatures. It's perfect when you need to cook faster.

OVERFLOW SAFETY DEVICE

The hob switches off automatically when any water or other liquid overflows.

EASY TO CLEAN

Induction hobs do not convey heat so any spilled or overflowed liquid does not adhere to the surface and can be removed easily with a simple sponge.

INDUCTION HOBS, CONTROLLED POWER

POWER AND CONTROL

The cooktop itself produces electromagnetic vibrations, which induce the pot or pan to generate its own heat. The results are shorter heat-up times, greater precision and a safer cooking surface.

PROTECTION AGAINST BURNS

Induction does not heat outside the pot space. The heat generated by the pot during use of the hob is not transmitted to the surface around the cooking area. There is also a warning light that indicates residual heat so you know when the area under the pot has cooled down to a safe temperature (< 60° C).

AUTOMATIC STOP

It activates automatically if the user forgets to turn off the heating element after cooking. In case there are no power variation within a limited period of time, the heating zone will switch off automatically.

AUTOMATIC TEMPERATURES

Three preset cooking temperatures, allow automatic preparation of a wide range of dishes. After selecting the most suitable cooking temperature (40° - 70° - 90°), you have the possibility to move freely without giving particular attention to the cooking, because a temperature sensor controls and maintains stable the cooking temperature. In this way you will optimize energy consumption with a great cooking result.

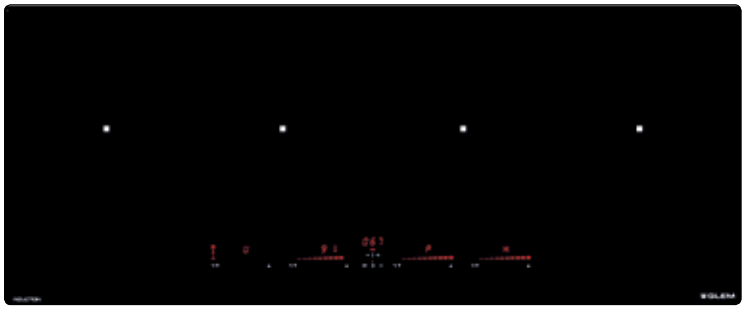

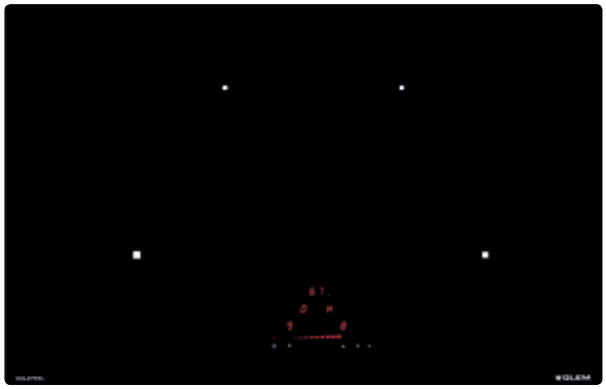

GTIP14BK

Performance and features

100 cm induction hob
4 zones
- left Ø 210 mm - 2900 / 3700 W
- central left Ø 210 mm - 2900 / 3700 W
- central right Ø 210 mm - 2900 / 3700 W
- right Ø 210 mm - 2900 / 3700 W
Total power: 7.400 W
9 power levels
4 slider touch controls
Timer

Functions

Booster
3 automatic temperatures
Heat up function: cooking programme featuring temporary booster

Safety

Child safety lock
Automatic temperatures
Residual heat indicator
Overflow safety device
Pot diameter detector
Automatic stop

GTIP14BK
Black ceramic glass

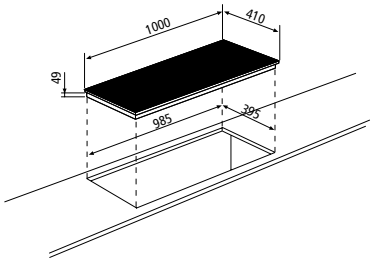

GTIP84BK

Performance and features

80 cm induction hob
4 zones
- front left Ø 280 mm - 2600 / 3700 W
- rear left Ø 180 mm - 2300 / 3000 W
- front right Ø 210 mm - 2600 / 3700 W
- rear right Ø 180 mm - 2300 / 3000 W
Total power: 7.400 W
9 power levels
1 slider touch control
Timer

Functions

Booster
2 automatic temperatures
Heat up function: cooking programme featuring temporary booster

Safety

Child safety lock
Automatic temperatures
Residual heat indicator
Overflow safety device
Pot diameter detector
Automatic stop

GTIP84BK
Black ceramic glass

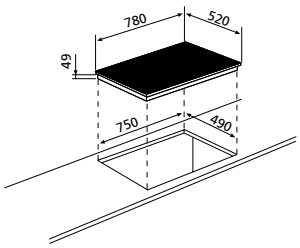

GTI642

Performance and features

60 cm induction hob
4 zones
- front left Ø 190 mm - 1400 / 2000 W
- rear left Ø 160 mm - 1200 / 1400 W
- front right Ø 160 mm - 1200 / 1400 W
- rear right Ø 200 mm - 2300 / 3000 W
Total power: 7.100 W
9 power levels
Touch control
Timer

Functions

Booster

Safety

Child safety lock
Residual heat indicator
Overflow safety device
Pot diameter detector
Automatic stop

GTI642
Black ceramic glass

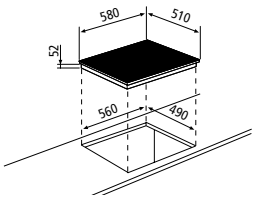

GTI632

Performance and features

60 cm induction hob
3 zones
- front left Ø 190 mm - 1400 / 2000 W
- rear left Ø 160 mm - 1200 / 1400 W
- rear right Ø 250 mm - 2300 / 3000 W
Total power: 6.400 W
9 power levels
Touch control
Timer

Functions

Booster

Safety

Child safety lock
Residual heat indicator
Overflow safety device
Pot diameter detector
Automatic stop

GTI632
Black ceramic glass

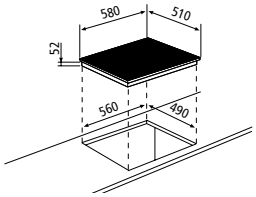

HEAT UP

The heat up function allows to set the maximum temperature for a limited period of time on the selected cooking zone, then the temperature decreases down to the lower selected value.

TIMER

The Timer function allows you to program the cooking time: when the period of time elapses, the burner turns off automatically.

CERAMIC HOBS

The SOPHISTICATED COOKING

CHILDREN SAFETY LOCK

This device disables the functions of the hob immediately, preventing a child from adjusting or changing the control settings.

OSD

OVERFLOW SAFETY DEVICE

The hob switches off automatically when any water or other liquid overflows.

AUTOMATIC STOP

It activates automatically if the user forgets to turn off the heating element after cooking. In case there are no power variation within a limited period of time, the heating zone will switch off automatically.

RESIDUAL HEAT INDICATOR

All of Glem's glass ceramic hobs have a residual heat indicator. When the hob is turned off, the warning light stays on until the hob has cooled down to below 60 °C, in the interest of added safety.

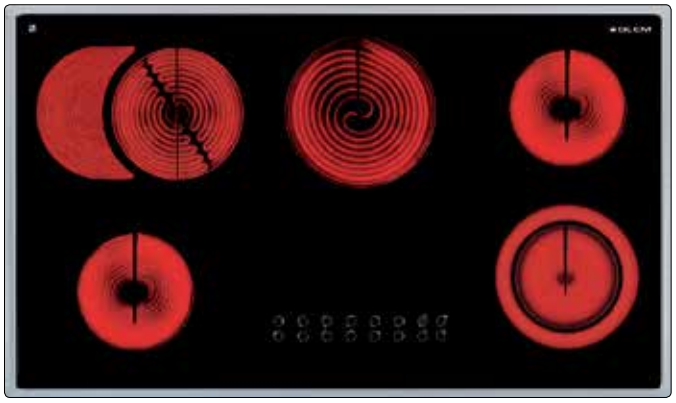

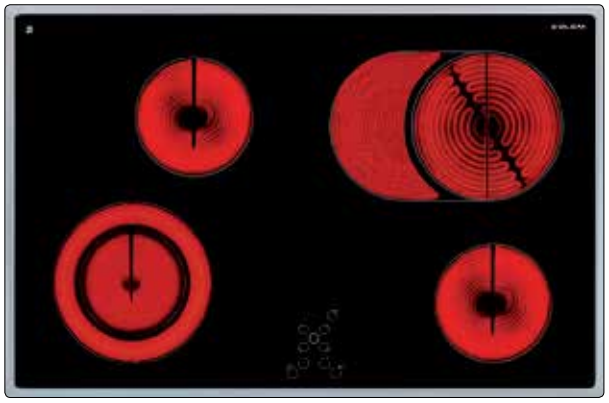

GTH96TIX

Performance and features

90 cm ceramic hob
5 high-light zones (with 1 dual - 1 extensible hotplates)
Total power: 8.100 W
9 power levels
Touch controls
Timer

Functions

Heat up function: cooking program featuring temporary booster

Safety

Child safety lock
Residual heat indicator
Overflow safety device
Automatic stop

GTH75TCIX

Performance and features

75 cm ceramic hob
4 high-light zones (with 1 dual - 1 extensible hotplates)
Total power: 6.700 W
9 power levels
Touch controls
Timer

Functions

Heat up function: cooking program featuring temporary booster

Safety

Child safety lock
Residual heat indicator
Overflow safety device
Automatic stop

GTH96TIX
St. steel frame / Black

GTH96T
Black (no frame)

GTH96T

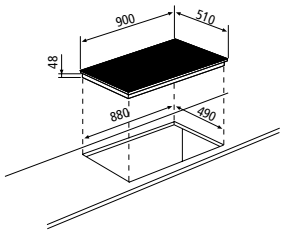

GTH75TCIX
St. steel frame / Black

GTH75TC
Black (no frame)

GTH75TC

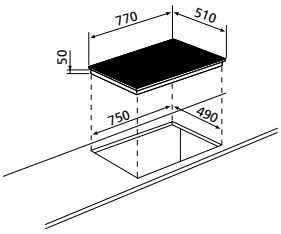

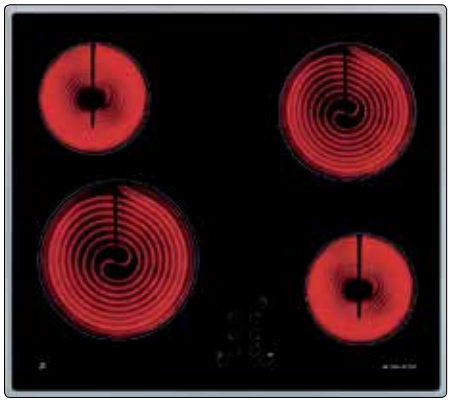

GTH64TIX

Performance and features

60 cm ceramic hob
4 high-light zones
Total power: 6.400 W
9 power levels
Touch controls
Timer

Functions

Heat up function: cooking program featuring temporary booster

Safety

Child safety lock
Residual heat indicator
Overflow safety device
Automatic stop

GTH64TIX
St. steel frame / Black

GTH64TF
Black (no frame)

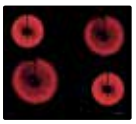

GTH64TF

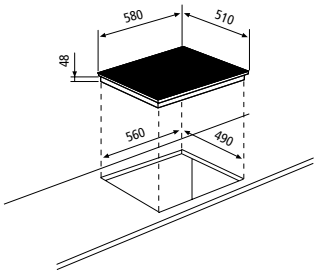

GTH64TCIX
St. steel frame / Black

GTH64TC
Black (no frame)

GTH64TC

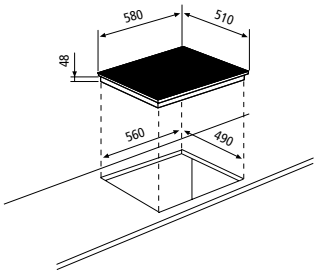

GTH64TCIX

Performance and features

60 cm ceramic hob
4 high-light zones
Total power: 6.000 W
9 power levels
Touch controls

Functions

Heat up function: cooking program featuring temporary booster

Safety

Child safety lock
Residual heat indicator
Overflow safety device
Automatic stop

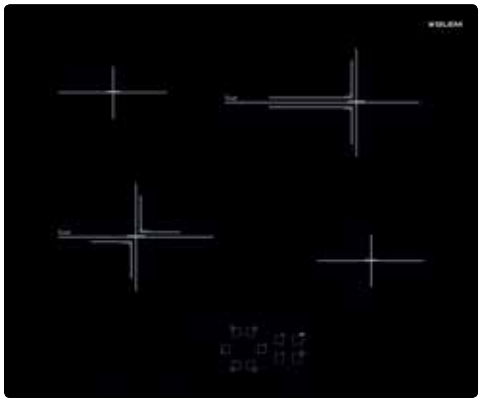

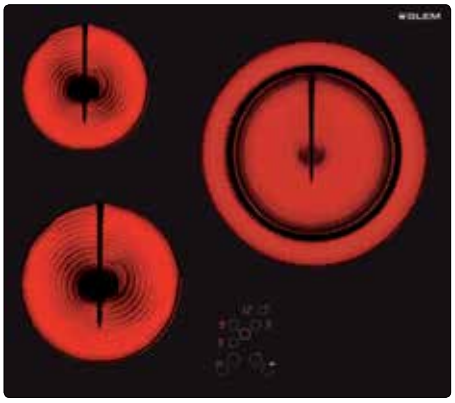

GTHP65T

Performance and features

60 cm ceramic hob
4 high-light zones (with 2 extensible hotplates):
to achieve a fast heat up time
Total power: 6.700 W
9 power levels
Touch controls
Timer

Functions

Heat up function: cooking program featuring temporary booster

Safety

Child safety lock
Residual heat indicator
Overflow safety device
Automatic stop

GTHP65T
Black (no frame)

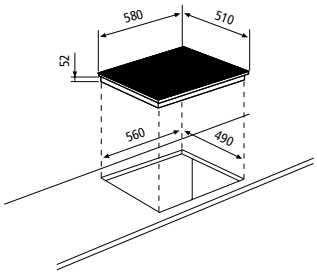

GTH63TBK

Performance and features

3 high-light zones (with 1 extensible hotplate):
to achieve a fast heat up time
Total power: 5.400 W
9 power levels
Touch controls
Timer

Safety

Child safety lock
Residual heat indicator
Overflow safety device
Automatic stop

GTH63TBK
Black (no frame)

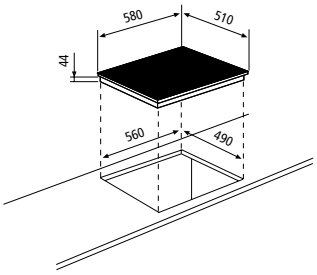

CERAMIC HOBS

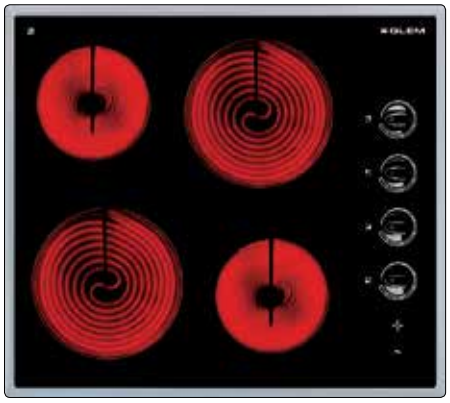

GTH64KIX

Performance and features

60 cm ceramic hob
4 high-light zones
Total power: 6.000 W
9 power levels
Side knobs controls

Safety

Residual heat indicator

GTH64KIX
St. steel frame / Black

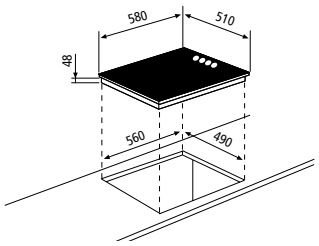

GLEM

CRYSTAL GAS HOBS

PURITY *of* GLASS

TRIPLE RING BURNER

The special burner with triple ring makes the most out of the power. The special shape of the burner permits uniformity of the flame. The power of 3.3 kW to 3.8 kW ensures maximum efficiency and faster cooking times.

ONE-HAND IGNITION

The one-hand ignition allows to ignite the hob through an easy pression of the knob.

CAST IRON PAN SUPPORT

Cast Iron is a very heat-resistant material that makes hobs long-lasting and similar to the professional ones, from an aesthetical point of view as well as from a functional one. They have been designed with particular attention to safety so that pans of any dimension can be put on them without falling over.

GV955BK

Performance and features

90 cm Crystal gas hob
5 gas burners
Total power: 10.800 W
1 Powerful Wok burner: 3.500 W

Functions

One-hand electronic ignition

Safety

Flame failure device (FFD)

Details

5 singles rounds enamelled pan support

3500 W

GV955BK
Black glass

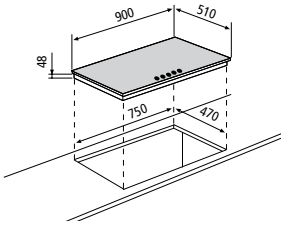

Standard cut-out size

GV755BK

Performance and features

70 cm Crystal gas hob
5 gas burners
Total power: 7.300 W
1 Powerful Wok burner: 3.500 W

Functions

One-hand electronic ignition

Safety

Flame failure device (FFD)

Details

5 singles rounds enamelled pan support

3500 W

GV755BK
Black glass

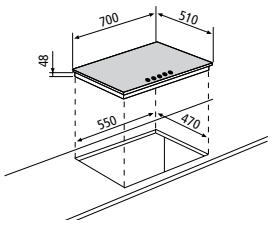

Standard cut-out size

GV64BK

Performance and features

60 cm Crystal gas hob
4 gas burners
Total power: 7.300 W

Functions

One-hand electronic ignition

Safety

Flame failure device (FFD)

Details

4 singles rounds enamelled pan support

GV64BK
Black glass

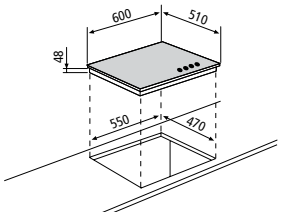

GVP635HBK

Performance and features

60 cm Crystal gas hob
3 gas burners
Total power: 6.150 W
1 Powerful Wok burner: 3.500 W

Functions

One-hand electronic ignition

Safety

Flame failure device (FFD)

Details

3 singles rounds cast iron pan supports

GVP635HBK
Black glass

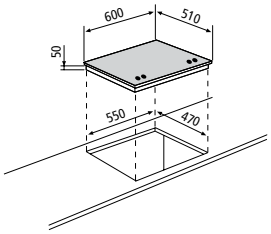

GAS HOBS

THINK *and then* COOK

DUAL BURNER WITH DUAL CONTROL

This powerful burner allows you to cook any food in the best possible manner and in the best possible time. The dual control means you can adjust the flame for each individual ring at a power of between 0.8 kW and 4.5 kW. It is therefore possible to turn on the central ring or the dual outer ring, or both: for large and small pans, concentrating the heat and energy only where it is needed.

TRIPLE RING BURNER

The special burner with triple ring makes the most out of the power. The special shape of the burner permits uniformity of the flame. The power of 3.3 kW to 3.8 kW ensures maximum efficiency and faster cooking times.

ONE-HAND IGNITION

The one-hand ignition allows to ignite the hob through an easy pression of the knob.

CAST IRON PAN SUPPORT

Cast Iron is a very heat-resistant material that makes hobs long-lasting and similar to the professional ones. They have been designed with particular attention to safety so that pans of any dimension can be placed them without falling over.

GT951HIX

Performance and features

90 cm gas hob
5 gas burners
1 Dual Wok burner: 800-4.500 W
Total power: 12.000 W
One-hand electronic ignition
Flame failure device (FFD)

Details

Cast iron pan supports
Dedicated Dual Wok area with 2 knobs control

GT955HIX

Performance and features

90 cm gas hob
5 gas burners
1 Wok burner: 3.800 W
Total power: 11.300 W
One-hand electronic ignition
Flame failure device (FFD)

Details

Cast iron pan supports

GT955HWH

GT955HBK

4500 W

GT951HIX (FFD)
St. steel

3800 W

GT955HIX (FFD)
St. steel

GT955HWH (FFD)
White

GT955HBK (FFD)
Black

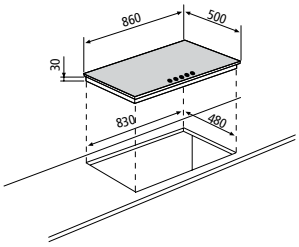

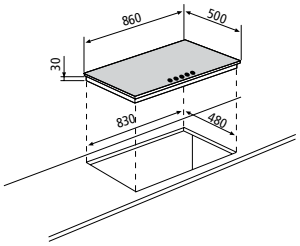

GT955IX

Performance and features

90 cm gas hob
5 gas burners
1 Wok burner: 3.800 W
Total power: 11.300 W
One-hand electronic ignition
Flame failure device (FFD)

Details

Matt enamelled pan supports
Also available without FFD

GT955WH - GT955NWH

GT955BK - GT955NBK

GT96NIX

Performance and features

90 cm gas hob
6 gas burners
Total power: 12.250 W
One-hand electronic ignition

Details

Matt enamelled pan supports

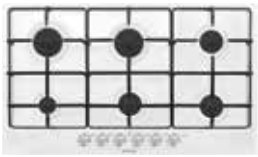

GT96NWH

GT96NBK

3800 W

GT955IX (FFD)
St. steel

GT955WH (FFD)
White

GT955BK (FFD)
Black

Without FFD

3800 W

GT955NIX
St. steel

GT955NWH
White

GT955NBK
Black

Without FFD

GT96NIX
St. steel

GT96NWH
White

GT96NBK
Black

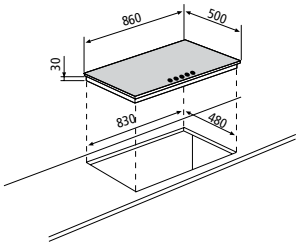

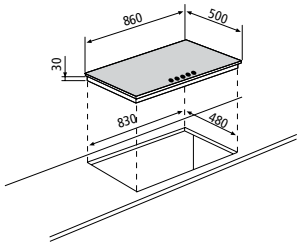

GT968NIX

Performance and features

90 cm gas hob
4 gas burners + 2 hot plates
Total electrical power: 3.500 W
Total gas power: 7.500 W
One-hand electronic ignition

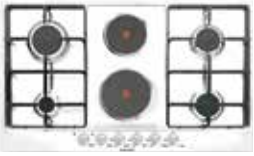

GT968NWH

Details

Matt enamelled pan supports

GT968NBK

GTL955IX

Performance and features

90 cm gas hob
5 gas burners
1 Wok burner: 3.300 W
Total gas power: 10.800 W
One-hand electronic ignition
Flame failure device (FFD)

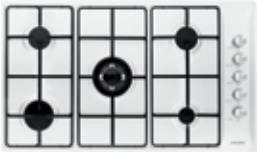

GTL955WH - GTL955NWH

Details

Matt enamelled pan supports
Also available without FFD

GTL955BK - GTL955NBK

Without FFD

GT968NIX
St. steel

GT968NWH
White

GT968NBK
Black

3300 W

GTL955IX (FFD)
St. steel

GTL955WH (FFD)
White

GTL955BK (FFD)
Black

Without FFD

3300 W

GTL955NIX
St. steel

GTL955NWH
White

GTL955NBK
Black

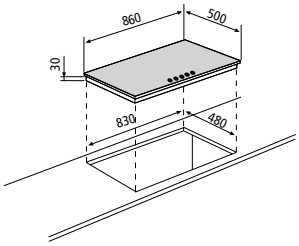

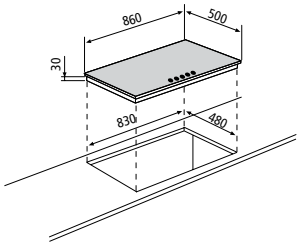

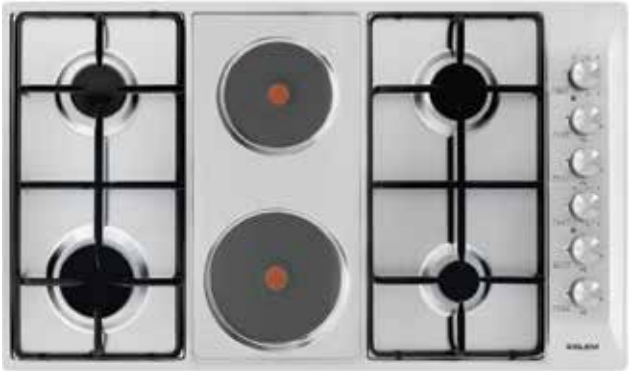

GTL968IX

Performance and features

90 cm gas hob
4 gas burners + 2 hot plates
Total electrical power: 3.500 W
Total gas power: 7.500 W
One-hand electronic ignition
Flame failure device (FFD)

Details

Matt enamelled pan supports
Also available without FFD

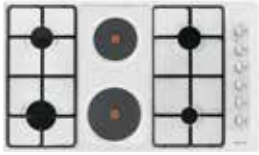

GTL968WH - GTL968NWH

GTL968BK - GTL968NBK

GTS51HIX

Performance and features

75 cm semi-flush gas hob
5 gas burners
1 Dual Wok burner: 800-4.500 W
Total power: 12.000 W
One-hand electronic ignition
Flame failure device (FFD)

Details

Cast iron pan supports
Dedicated Dual Wok area with 2 knobs control

GTL968IX (FFD)
St. steel

GTL968WH (FFD)
White

GTL968BK (FFD)
Black

Without FFD

GTL968NIX
St. steel

GTL968NWH
White

GTL968NBK
Black

4500 W

GTS51HIX (FFD)
St. steel

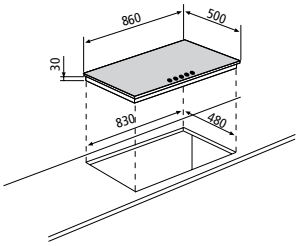

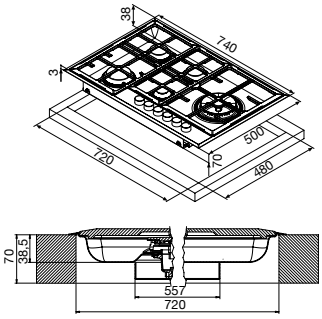

GT851HIX

Performance and features

75 cm gas hob
5 gas burners
1 Dual Wok burner: 800-4.500 W
Total power: 12.000 W
One-hand electronic ignition
Flame failure device (FFD)

Details

Cast iron pan supports
Dedicated Dual Wok area with 2 knobs control

4500 W

GT851HIX (FFD)
St. steel

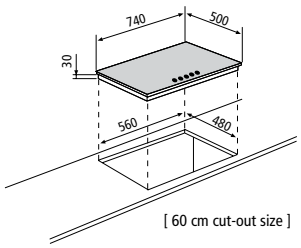

GT842HIX

Performance and features

75 cm gas hob
4 gas burners
1 Dual Wok burner: 800-4.500 W
1 Wok burner: 3.300 W
Total power: 10.550 W
One-hand electronic ignition
Flame failure device (FFD)

Details

Cast iron pan supports
Dedicated Dual Wok area with 2 knobs control

4500 W 3300 W

GT842HIX (FFD)
St. steel

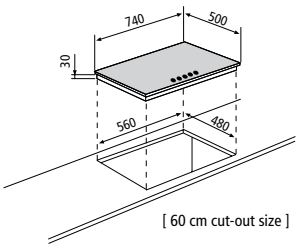

GT871HIX

Performance and features

75 cm gas hob
5 gas burners
1 Dual Wok burner: 800-4.500 W
Total power: 12.000 W
One-hand electronic ignition
Flame failure device (FFD)

Details

Cast iron pan supports
Dedicated Dual Wok area with 2 knobs control

4500 W

GT871HIX (FFD)
St. steel

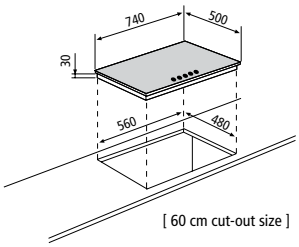

[60 cm cut-out size]

GT755HIX

Performance and features

70 cm gas hob
5 gas burners
1 Wok burner: 3.300 W
Total power: 10.800 W
One-hand electronic ignition
Flame failure device (FFD)

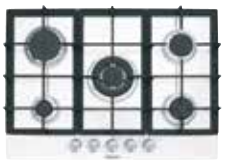

GT755HWH

Details

Cast iron pan supports

GT755HBK

3300 W

GT755HIX (FFD)
St. steel

GT755HWH (FFD)
White

GT755HBK (FFD)
Black

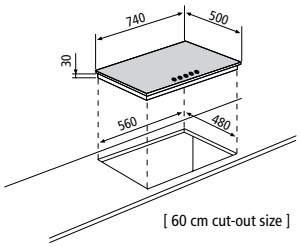

[60 cm cut-out size]

GT755IX

Performance and features

70 cm gas hob
5 gas burners
1 Wok burner: 3.300 W
Total power: 10.800 W
One-hand electronic ignition
Flame failure device (FFD)

Details

Matt enamelled pan supports
Also available without FFD

GT755WH - GT755NWH

GT755BK - GT755NBK

GT731IX

Performance and features

70 cm gas hob
3 gas burners
1 Dual Wok burner: 800-4.500 W
Total power: 8.000 W
One-hand electronic ignition
Flame failure device (FFD)

Details

Matt enamelled pan supports
Dedicated Dual Wok area with 2 knobs control
Also available without FFD

3300 W

GT755IX (FFD)
St. steel

GT755WH (FFD)
White

GT755BK (FFD)
Black

Without FFD

3300 W

GT755NIX
St. steel

GT755NWH
White

GT755NBK
Black

4500 W

GT731IX (FFD)
St. steel

Without FFD

4500 W

GT731NIX
St. steel

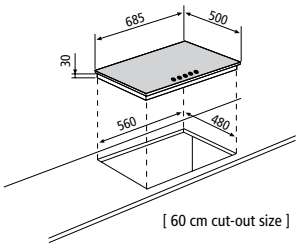

[60 cm cut-out size]

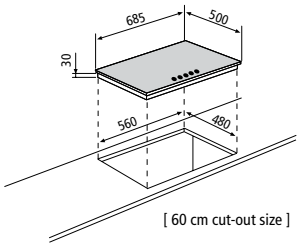

[60 cm cut-out size]

GT685HIX

Performance and features

60 cm gas hob
4 gas burners
1 Wok burner: 3.300 W
Total power: 8.300 W
One-hand electronic ignition
Flame failure device (FFD)

GT685HWH

Details

Cast iron pan supports

GT685HBK

GT64HIX

Performance and features

60 cm gas hob
4 gas burners
Total power: 7.500 W
One-hand electronic ignition
Flame failure device (FFD)

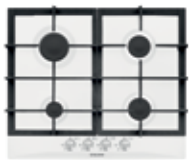

GT64HWH

Details

Cast iron pan supports

GT64HBK

GT685HIX (FFD)
St. steel

GT685HWH (FFD)
White

GT685HBK (FFD)
Black

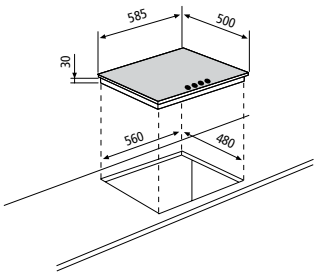

GT64HIX (FFD)
St. steel

GT64HWH (FFD)
White

GT64HBK (FFD)
Black

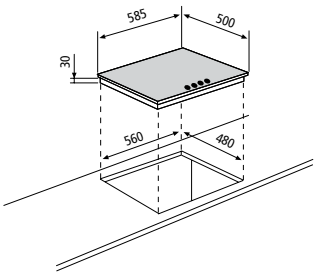

GT64IX

Performance and features

60 cm gas hob
4 gas burners
Total power: 7.500 W
One-hand electronic ignition
Flame failure device (FFD)

GT64WH - GT64NWH

Details

Matt enamelled pan supports
Also available without FFD

GT64BK - GT64NBK

GT685IX

Performance and features

60 cm gas hob
4 gas burners
1 Wok burner: 3.300 W
Total power: 8.300 W
One-hand electronic ignition
Flame failure device (FFD)

GT685WH - GT685NWH

Details

Matt enamelled pan supports
Also available without FFD

GT685BK - GT685NBK

GT64IX (FFD)
St. steel

GT64WH (FFD)
White

GT64BK (FFD)
Black

Without FFD

GT64NIX
St. steel

GT64NWH
White

GT64NBK
Black

GT685IX (FFD)
St. steel

GT685WH (FFD)
White

GT685BK (FFD)
Black

Without FFD

GT685NIX
St. steel

GT685NWH
White

GT685NBK
Black

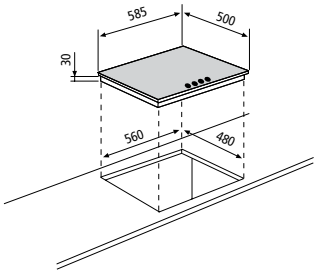

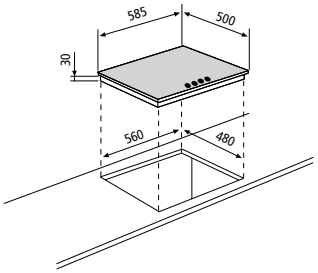

GT645IX

Performance and features

60 cm gas hob
4 gas burners
1 Wok burner: 3.300 W
Total power: 9.050 W
One-hand electronic ignition
Flame failure device (FFD)

Details

Matt enamelled pan supports

GT647IX

Performance and features

60 cm gas hob
3 gas burners + 1 hot plate
Total power: 7.250 W
One-hand electronic ignition
Flame failure device (FFD)

Details

Matt enamelled pan supports
Also available without FFD

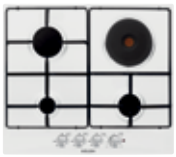

GT647WH - GT647NWH

GT647BK - GT647NBK

3800 W

GT645IX (FFD)
St. steel

GT647IX (FFD)
St. steel

GT647WH (FFD)
White

GT647BK (FFD)
Black

Without FFD

GT647NIX
St. steel

GT647NWH
White

GT647NBK
Black

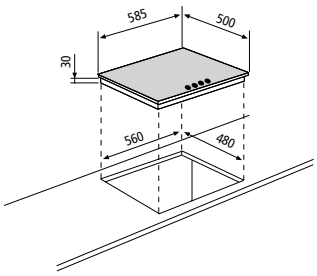

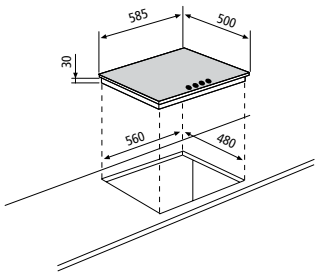

GAS HOBS

GTL64IX

Performance and features

60 cm gas hob
4 gas burners
Total power: 7.500 W
One-hand electronic ignition
Flame failure device (FFD)

Details

Matt enamelled pan supports
Also available without FFD

GTL64WH - GTL64NWH

GTL64BK - GTL64NBK

GTL647IX

Performance and features

60 cm gas hob
3 gas burners + 1 hot plate
Total power: 7.250 W
One-hand electronic ignition
Flame failure device (FFD)

Details

Matt enamelled pan supports
Also available without FFD

GTL647WH - GTL647NWH

GTL64IX (FFD)
St. steel

GTL64WH (FFD)
White

GTL64BK (FFD)
Black

Without FFD

GTL64NIX
St. steel

GTL64NWH
White

GTL64NBK
Black

GTL647IX
St. steel

GTL647WH
White

Without FFD

GTL647NIX
St. steel

GTL647NWH
White

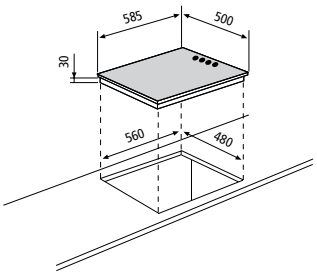

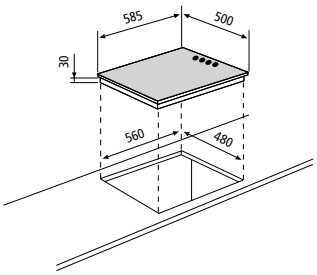

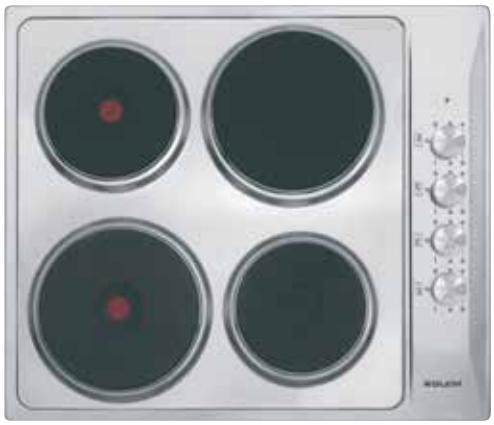

GTL640IX

Performance and features

60 cm electric hob
4 hot plates
Total power: 6.000 W

GTL640WH

GTL640IX
St. steel

GTL640WH
White

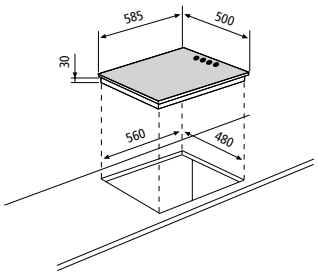

DOMINO HOBS

Your TAILOR MADE LAYOUT

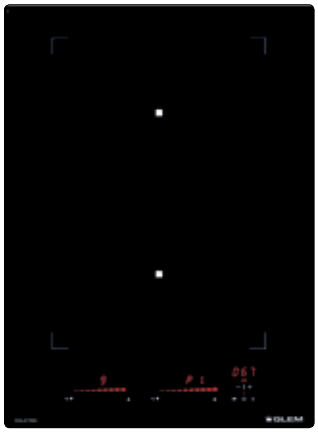

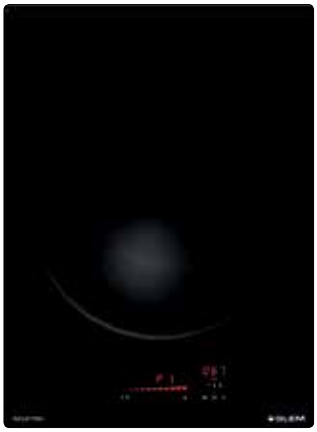

GTIP42BK

Performance and features

38 cm wide – Induction Domino
2 zones
Total power: 3.700 W
9 power levels
2 sliders touch controls
Timer

Functions

Booster: to increase the power of any cooking zone up to 75%
3 automatic temperatures
Heat up function: cooking programme featuring temporary booster
Bridge function: allows two heating zones to be controlled and treated as one

Safety

Child safety lock
Residual heat indicator
Overflow safety device
Pot diameter detector
Automatic stop

GTIPW41BK

Performance and features

38 cm wide – Wok Domino
1 Wok burner: 3.000 W
9 power levels
1 slider touch control
Timer

Functions

Booster: to increase the power of any cooking zone up to 75%
3 automatic temperatures
Heat up function: cooking programme featuring temporary booster

Safety

Child safety lock
Residual heat indicator
Overflow safety device
Pot diameter detector
Automatic stop

GTIP42BK
Black ceramic glass

GTIPW41BK
Black ceramic glass

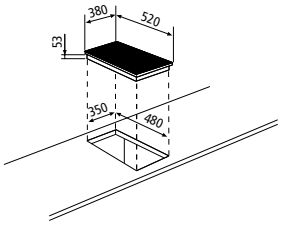

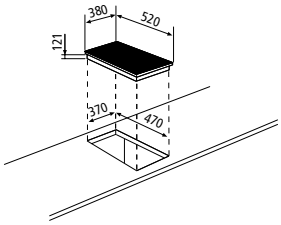

GTPN42BK

Performance and features

38 cm wide – Teppanyaki induction Domino
2 indipendent thermostatically controlled cooking areas
Total power: 2.800 W
9 power levels
Slider touch controls
2 timers (1 for egg cooking)
Digital clock

Functions

Temperature regulator between 50° and 220°
Memory
Bridge function: allows two heating zones to be controlled and treated as one

Safety

Child safety lock
Residual heat indicator
Overflow safety device
Over temperature cut-off
Automatic stop

Details

Full glass control panel

GTPN42BK
St. steel grill plate

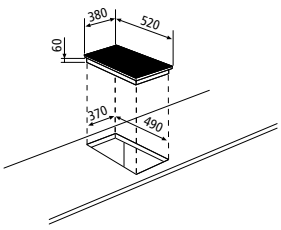

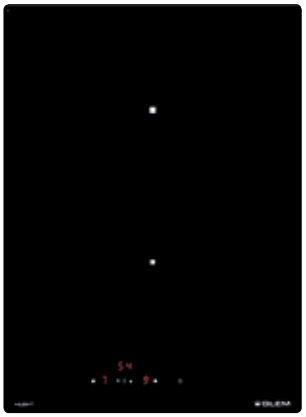

GTHP42BK

Performance and features

38 cm wide – Ceramic Domino
2 high-light zones: to achieve a fast heat up time
Total power: 3.000 W
9 power levels
Digital controls
Digital clock
2 Timers (1 for the egg cooking)

Functions

Automatic cooking
Booster: to increase the power of any cooking zone up to 75%

Safety

Child safety lock
Residual heat indicator
Over temperature cut-off
Overflow safety device
Automatic stop

GTHP42BK
Black ceramic glass

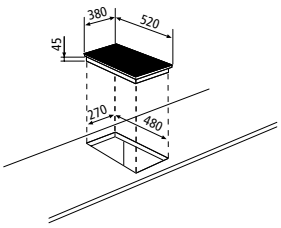

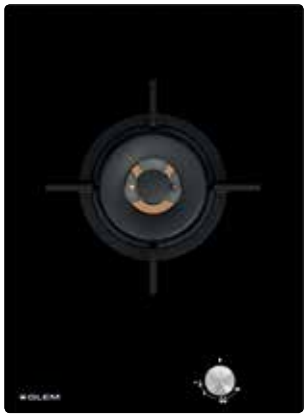

GVP415HBK

Performance and features

38 cm wide – High power Ceramic Domino gas
1 Powerful Wok: 5.000 W

Functions

One-hand electronic ignition

Safety

Flame failure device (FFD)

Details

Single round cast iron pan support
Wok support

GVP415HBK
Black ceramic glass

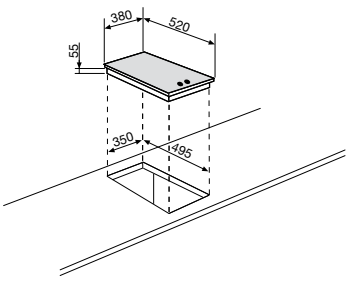

GVP42HBK

Performance and features

38 cm wide – Ceramic Domino gas
2 gas burners
Total power: 4.000 W

Functions

One-hand electronic ignition

Safety

Flame failure device (FFD)

Details

2 Singles rounds cast iron pan supports
Wok support

GVP42HBK
Black ceramic glass

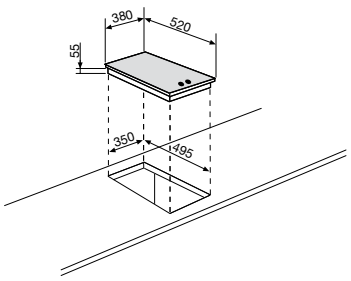

GT415HIX

Performance and features

37 cm wide – Domino gas
1 Powerful Wok: 3.800 W
One-hand electronic ignition
Flame failure device (FFD)

Details

Cast iron pan support

GT415HIX
St. steel

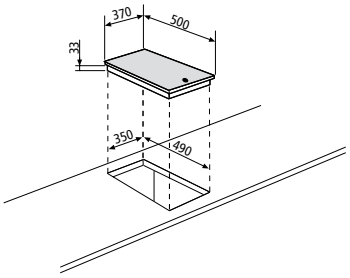

GT42HIX

Performance and features

37 cm wide – Domino gas
2 gas burners
Total power: 4.000 W
One-hand electronic ignition
Flame failure device (FFD)

Details

Cast iron pan support

GT42HIX
St. steel

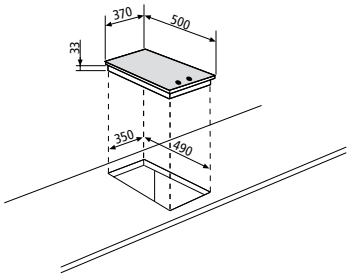

GTI322

Performance and features

30 cm wide – Induction Domino
2 zones
- front left Ø 160 mm - 1400 W
- rear left Ø 200 mm - 1400 / 2000 W
Total power: 3.400 W
9 power levels
Touch controls
Timer

Functions

Booster

Safety

Child safety lock
Residual heat indicator
Overflow safety device
Pot diameter detector
Automatic stop

GTI322
Black ceramic glass

GTH32K

Performance and features

30 cm wide – Ceramic Domino
2 high-light zones: to achieve a fast heat up time
Total power: 3.000 W
9 power levels
Frontal knobs controls

Safety

Residual heat indicator

GTH32K
Black ceramic glass

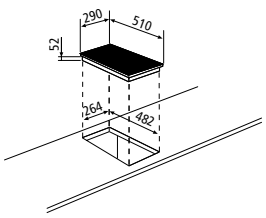

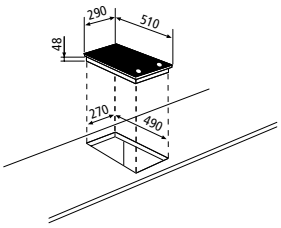

GT315IX

Performance and features

30 cm wide – Domino gas
1 Powerful Wok: 3.300 W
One-hand electronic ignition
Flame failure device (FFD)

Details

Matt enamelled pan supports
Also available without FFD

GT315IX (FFD)
St. steel

Without FFD

GT315NIX
St. steel

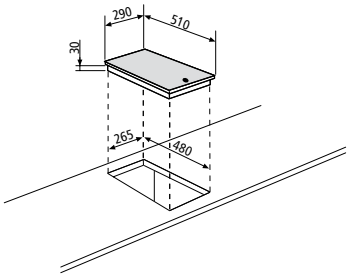

GT32IX

Performance and features

30 cm wide – Domino gas
2 gas burners
Total power: 4.000 W
One-hand electronic ignition
Flame failure device (FFD)

Details

Matt enamelled pan supports
Also available without FFD

GT32IX (FFD)
St. steel

Without FFD

GT32NIX
St. steel

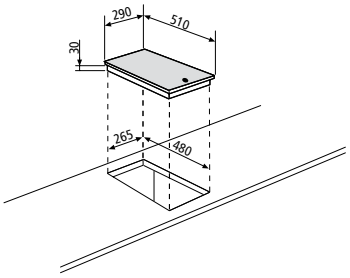

GT320IX

Performance and features

30 cm wide – Domino electric
2 hot plates
Total power: 3.500 W
Power on indicator

GT320IX
St. steel

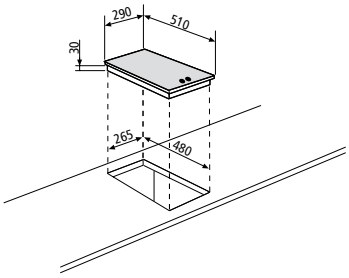

GT3BIX

Performance and features

30 cm wide – Domino electric
Barbecue: 2.400 W
Power on indicator

Details

Enamelled pan support

30 cm

GT3BIX
St. steel

GT3FIX

Performance and features

30 cm wide – Domino electric
Fryer: 2.300 W
Power on indicator

30 cm

GT3FIX
St. steel

GTH32KIX

Performance and features

30 cm wide – Ceramic Domino electric
2 high-light zones
Total power: 3.000 W
Power on indicator

30 cm

GTH32KIX
St. steel

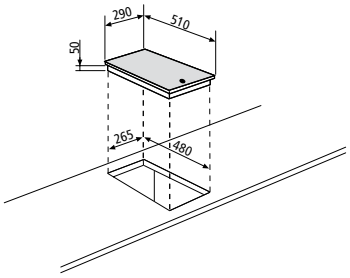

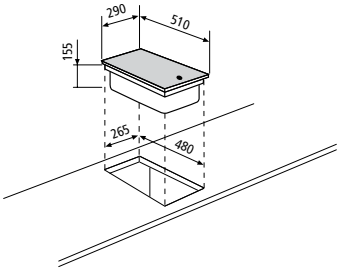

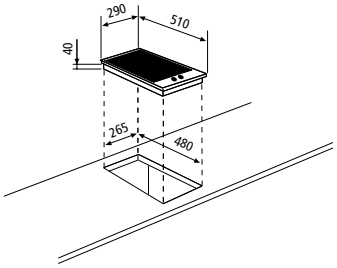

HOODS

POWER *and* SILENCE

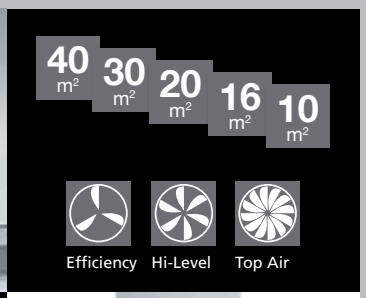

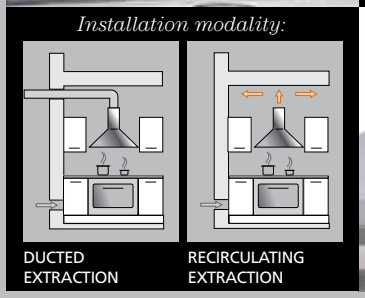

PERIMETRAL ASPIRATION

Thanks to the special restriction created, the perimeter extraction system generates an increase in air speed and reduces the quantity of fumes which escape beyond the hood's extraction rim. The stainless steel panels add prestige to the product for a more elegant, sophisticated look. The flat, smooth surface also makes the hood easier to clean.

POWER LEVEL (1 - 2 - 3)

Glem offers a variety of extractor units so you can select the one best suited to your personal needs.

STYLE AND ELEGANCE

Kitchens are all the more in harmony with the home, with efficient extractor systems that blend in with the design of the furniture. Glem presents a range of updated models with a suitable image and improved functionality that can fit in with any types of kitchen furniture; they can be installed under cabinets or independently on a wall. Made of stainless steel and glass, with sophisticated details, Glem hoods can add elegance to kitchen environments.

FILTERS

There are two types of filter that optimize use of the hoods: a grease filter and an active carbon odour filter (provided as standard with Glem hoods). The grease filter comes in two types: metal or synthetic, and protects the motor by preventing grease in the cooking fumes from damaging it. The metal filter can be cleaned in the dishwasher. The odour filter is an active carbon filter that purifies the air before expelling it back into the kitchen environment.

SATURATION FILTER ALARM

After 30 hours of operation, a flashing signal from the operating panel advises the user that is necessary to clean the anti-grease filters. Similarly, after 120 hours of use, a different flashing signal indicates that the carbon filters (wherever present) need to be replaced. The above noted procedures are fundamental in order to guarantee the maximum efficiency of the product.

GHB127IX WALL HOOD

Performance and features

120 cm wide
Electronic controls
3 speeds + 1 intensive
3x1,5W led
St. steel buffle filters
Carbon filters
Maximum extraction rate 740 m³/h

Functions

Delay timer
Clean Air
Filters saturation alarm
Booster: 6’ at full power to eliminate intense odours/steam

GHB127IX
St. steel

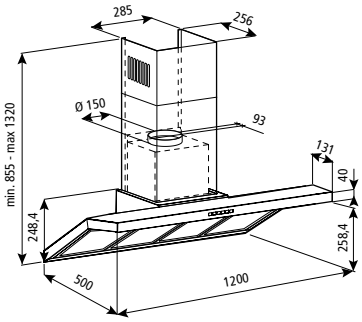

GHIB98IX ISLAND HOOD

Performance and features

90 cm wide
Electronic controls
3 speeds + 1 intensive
4x20W halogen lamps
Aluminium grease filters
Carbon filters
Maximum extraction rate 700 m³/h

Functions

Filters saturation alarm
Booster: 10’ at full power to eliminate intense odours/steam

GHIB98IX
St. steel

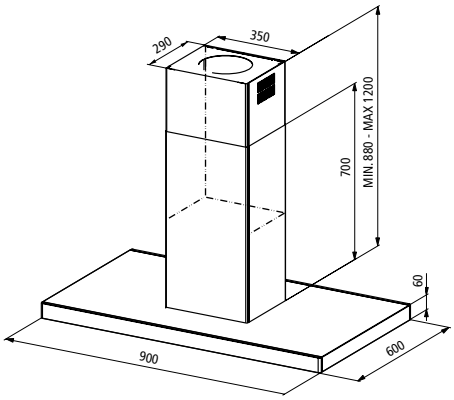

GHS98IX WALL GLASS HOOD

Performance and features

90 cm wide
Electronic controls
2 speeds + 1 intensive
2x20W halogen lamps
Aluminium grease filters
Carbon filter
Maximum extraction rate 735 m³/h

Functions

Booster: 10' at full power to eliminate intense odours/steam

90 cm

GHS98IX
St. steel / glass

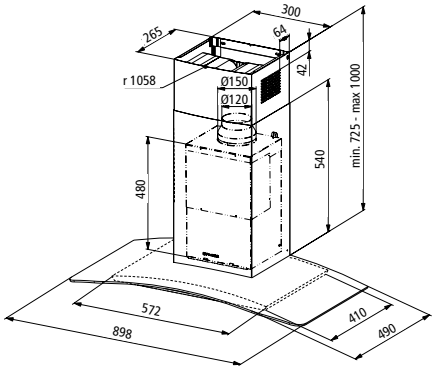

GHS68IX WALL GLASS HOOD

Performance and features

60 cm wide
Electronic controls
2 speeds + 1 intensive
2x20W halogen lamps
Aluminium grease filters
Carbon filter
Maximum extraction rate 735 m³/h

Functions

Booster: 10' at full power to eliminate intense odours/steam

60 cm

GHS68IX
St.steel / glass

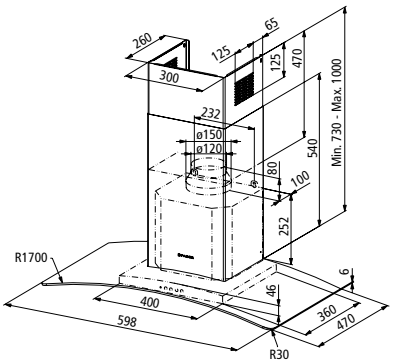

GHR98IX WALL CURVED HOOD

Performance and features

90 cm wide
Electronic controls
2 speeds + 1 intensive
2x20W halogen lamps
Aluminium grease filters
Carbon filter
Maximum extraction rate 735 m³/h

Functions

Booster: 10’ at full power to eliminate intense odours/steam

90 cm

GHR98IX
St. steel

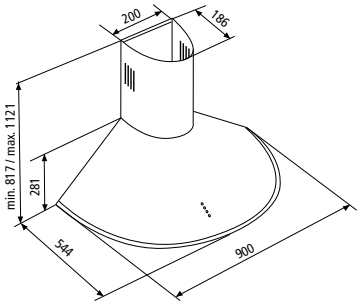

GHB98IX WALL BOX HOOD

Performance and features

90 cm wide
Electronic controls
2 speeds + 1 intensive
2x20W halogen lamps
Aluminium grease filters
Carbon filter
Maximum extraction rate 735 m³/h

Functions

Booster: 10’ at full power to eliminate intense odours/steam

90 cm

GHB98IX
St. steel

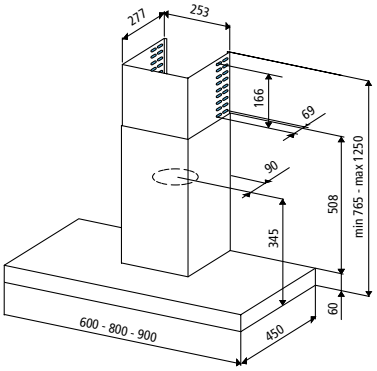

GHP98IX WALL CHIMNEY HOOD

Performance and features

90 cm wide
Electronic controls
3 speeds + 1 intensive
2x20W halogen lamps
Aluminium grease filters
Carbon filter
Maximum extraction rate 735 m^3/h

Functions

Delay timer
Filters saturation alarm
Booster: 6′ at full power to eliminate intense odours/steam

GHP98IX
St. steel

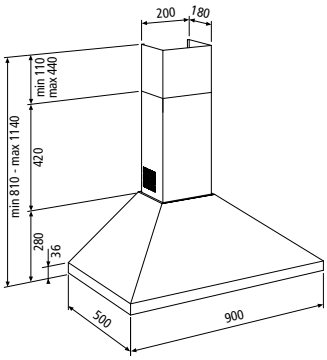

GHP68IX WALL CHIMNEY HOOD

Performance and features

60 cm wide
Electronic controls
3 speeds + 1 intensive
2x20W halogen lamps
Aluminium grease filters
Carbon filter
Maximum extraction rate 735 m^3/h

Functions

Delay timer
Filters saturation alarm
Booster: 6′ at full power to eliminate intense odours/steam

GHP68IX
St. steel

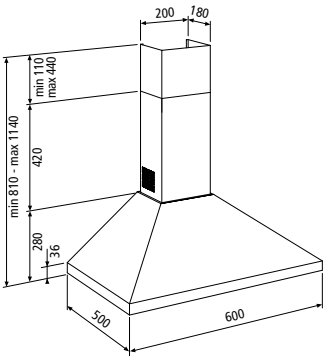

GHP94IX WALL CHIMNEY HOOD

Performance and features

90 cm wide
Push buttons
3 speeds
2x28W halogen lamps
Aluminium grease filters
Carbon filter
Maximum extraction rate 435 m³/h

90 cm

GHP94IX
St. steel

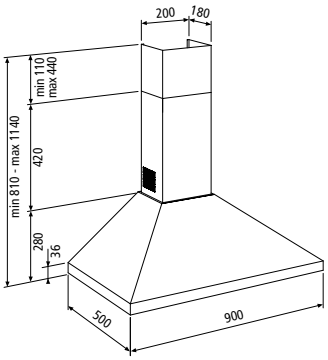

GHP64IX WALL CHIMNEY HOOD

Performance and features

60 cm wide
Push buttons
3 speeds
2x28W halogen lamps
Aluminium grease filters
Carbon filter
Maximum extraction rate 435 m³/h

60 cm

GHP64IX
St. steel

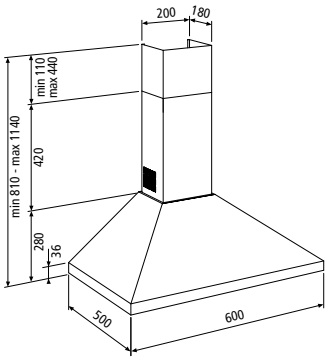

GHC95IX

Performance and features

90 cm wide
Push buttons
3 speeds
2x28W halogen lamps
Metallic grease filters
Carbon filter
Maximum extraction rate 360 m³/h

GHC65IX

Performance and features

60 cm wide
Push buttons
3 speeds
2x28W halogen lamps
Metallic grease filters
Carbon filter
Maximum extraction rate 360 m³/h

90 cm

GHC95IX
Full St. steel

60 cm

GHC65IX
Full St. steel

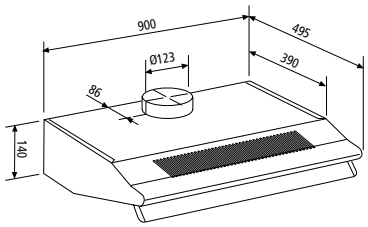

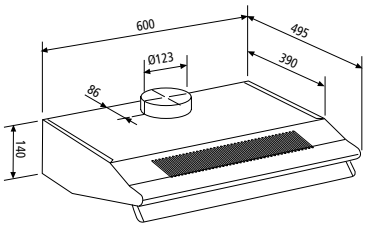

HOODS

GHL90XX - GHL60XX

Performance and features

90 - 60 cm wide
Slider controls
3 speeds
1x28W halogen lamps
Acrylic grease filters
Carbon filter
Maximum extraction rate 207 m³/h
Also available 60 Hz

GHL90WH
GHL60WH

GHL90BK
GHL60BK

GHE90SI - GHE60SI

Performance and features

90 - 60 cm wide
Slider controls
3 speeds
1x28W halogen lamps
Acrylic grease filters
Carbon filter
Maximum extraction rate 171 m³/h

90 cm

GHL90XX
Full St. steel

GHL90WH
White

GHL90BK
Black

60 cm

GHL60XX
Full St. steel

GHL60WH
White

GHL60BK
Black

90 cm

GHE90SI
Silver

60 cm

GHE60SI
Silver

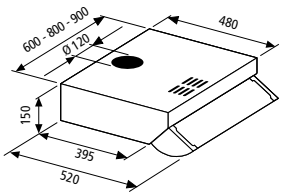

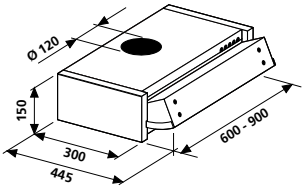

TECHNICAL FEATURES OVENS

	GFP16	GFP13	GFP93	GFS93	GFS53	GFS92
Collection	Contemporaneo	Contemporaneo	Contemporaneo	Stylish	Stylish	Stylish
Type	Multifunction	Multifunction	Multifunction	Multifunction	Multifunction	Multifunction
Colour	IX	IX	IX	IX	IX	IX
Supply	Electric	Electric	Electric	Electric	Electric	Electric
FUNCTIONS						
Programs number	13	11	9	9	5	9
Light	-	-	-	-	-	-
Pizza	•	•	•	•	-	•
Pre-heating	-	•	•	•	-	•
Traditional cooking	•	•	•	•	•	•
Bottom element	-	•	-	-	•	-
Bottom element + fan	•	•	-	-	•	-
Upper element	•	-	-	-	-	-
Grill	•	•	•	•	-	•
Grill + upper element (double grill)	•	-	•	•	-	•
Double grill + fan	•	•	•	•	-	•
Double grill + turnspit	-	-	-	-	-	-
Double grill + fan + turnspit	-	-	-	-	-	-
Grill + fan	•	-	-	-	•	-
Grill + turnspit	-	-	-	-	-	-
Grill + fan + turnspit	-	-	-	-	-	-
Static + fan	•	•	•	•	•	•
Multifunction (circular + fan)	•	•	•	•	-	•
Defrosting	•	•	•	•	-	•
Upper element + fan	•	-	-	-	-	-
Turnspit	-	-	-	-	-	-
Gas	-	-	-	-	-	-
Grill Gas	-	-	-	-	-	-
Grill Gas + fan	-	-	-	-	-	-
Grill Gas + turnspit	-	-	-	-	-	-
Grill Gas + turnspit + fan	-	-	-	-	-	-
Gas + fan	-	-	-	-	-	-
Gas + turnspit	-	-	-	-	-	-
Gas + turnspit + fan	-	-	-	-	-	-
Low temp	•	•	-	-	-	-
PROGRAMMING						
Clock-Oven Control System	Full touch electronic programmer	Full electronic programmer	Touch electronic programmer	Electronic programmer	Electronic programmer	Timer 120' end of cooking
Preset Temperature	•	•	-	-	-	-
OVEN CAVITY						
Black enamel	-	-	-	-	-	-
Titanium enamel	•	•	•	•	•	•
OVEN CAVITY EQUIPMENT						
n° grids	1	1	1	1	1	1
n° driptray	2	2	2	2	1	2
Turnspit	-	-	-	-	-	-
n° level with telescopic rails	2 / partial extension	2 / partial extension	2 / partial extension	-	-	-
Other accessories	-	-	-	-	-	-
TECHNICAL FEATURES						
Embossed	-	-	-	-	-	-
Smooth sides with chromed racks	•	•	•	•	•	•
n° door glass	3	3	3	3	3	3
Glass Door Type	Full glass flat	Full glass flat	Full glass flat	Full glass flat	Full glass flat	Full glass flat
Removable door glass	•	•	•	•	•	•
Cold door	•	•	•	•	•	•
Tangential cooling fan	•	•	•	•	•	•
Security gas valve	-	-	-	-	-	-
n° lamps	1 x 25 W	1 x 25 W	1 x 25 W	1 x 25 W	1 x 25 W	1 x 25 W
Net volume lt	64	64	64	64	64	64
Power W	2.850	2.870	2.670	2.858	2.670	2.870
Voltage/Frequency V/Hz	220-240 / 50-60	220-240 / 50-60	220-240 / 50-60	220-240 / 50-60	220-240 / 50-60	220-240 / 50-60
Efficiency energy class [1]	A	A	A	A	A	A
Energy consumption conventional [1] kWh/MJ	0,88	0,88	0,88	0,88	0,88	0,88
Energy consumption fan forced [1] kWh/MJ	0,80	0,80	0,80	0,80	0,80	0,80
DIMENSIONS						
Product HxWxD mm	590x597x543	590x597x543	590x597x543	590x597x543	590x597x543	590x597x543
Built-in HxWxD mm	583x554x564	583x554x564	583x554x564	583x554x564	583x554x564	583x554x564
Package HxWxD mm	700x640x640	700x640x640	700x640x640	700x640x640	700x640x640	700x640x640

[1] from January 2015, according to regulation 65/2014

Colours legend: BK= Black IX= St. steel WH= White

	GFS52	GFEA93	GFE92	GFE52	GFEV	GFEW
Collection	Stylish	Excellence	Excellence	Excellence	Excellence	Excellence
Type	Multifunction	Multifunction	Multifunction	Multifunction	Gas fan assisted	Gas / Gas Grill
Colour	IX	IX	IX	IX	IX	IX
Supply	Electric	Electric	Electric	Electric	21 (Natural gas G20)	21 (Natural gas G20)
FUNCTIONS						
Programs number	5	9	9	5	6	7
Light	-	-	-	-	•	•
Pizza	-	•	•	-	-	-
Pre-heating	-	•	•	-	-	-
Traditional cooking	•	•	•	•	-	-
Bottom element	•	-	-	•	-	-
Bottom element + fan	•	-	-	•	-	-
Upper element	-	-	-	-	-	-
Grill	-	•	•	-	-	-
Grill + upper element (double grill)	-	•	•	-	-	-
Double grill + fan	-	•	•	-	-	-
Double grill + turnspit	-	-	-	-	-	-
Double grill + fan + turnspit	-	-	-	-	-	-
Grill + fan	•	-	-	•	-	-
Grill + turnspit	-	-	-	-	•	•
Grill + fan + turnspit	-	-	-	-	•	-
Static + fan	•	•	•	•	-	-
Multifunction (circular + fan)	-	•	•	-	-	-
Defrosting	-	•	•	-	•	•
Upper element + fan	-	-	-	-	-	-
Turnspit	-	-	-	-	-	-
Gas	-	-	-	-	•	•
Grill Gas	-	-	-	-	-	•
Grill Gas + fan	-	-	-	-	-	-
Grill Gas + turnspit	-	-	-	-	-	-
Grill Gas + turnspit + fan	-	-	-	-	-	-
Gas + fan	-	-	-	-	-	•
Gas + turnspit	-	-	-	-	-	-
Gas + turnspit + fan	-	-	-	-	•	•
Low temp	-	-	-	-	-	-
PROGRAMMING						
Clock-Oven Control System	Timer 120' end of cooking	Electronic programmer	Timer 120' end of cooking	Timer 120' end of cooking	Minute minder 60'	Minute minder 60'
Preset Temperature	-	-	-	-	-	-
OVEN CAVITY						
Black enamel	-	-	-	-	-	-
Titanium enamel	•	•	•	•	•	•
OVEN CAVITY EQUIPMENT						
n° grids	1	2	1	1	1	1
n° driptray	1	1	1	1	1	1
Turnspit	-	-	-	-	•	•
n° level with telescopic rails	-	-	-	-	-	-
Other accessories	-	-	-	-	-	-
TECHNICAL FEATURES						
Embossed	-	-	-	-	-	-
Smooth sides with chromed racks	•	•	•	•	•	•
n° door glass	3	3	3	3	3	3
Glass Door Type	Full glass flat	Full glass flat	Full glass flat	Full glass flat	Full glass flat	Full glass flat
Removable door glass	•	-	-	-	-	-
Cold door	•	-	-	-	-	-
Tangential cooling fan	•	•	•	•	•	•
Security gas valve	-	-	-	-	•	•
n° lamps	1 x 25 W	1 x 25 W	1 x 25 W	1 x 25 W	1 x 25 W	1 x 25 W
Net volume lt	64	64	64	64	63	60
Power W	2.670	2.868	2.868	2.868	1.350	54
Voltage/Frequency V/Hz	220-240 / 50-60	220-240 / 50-60	220-240 / 50-60	220-240 / 50-60	220-240 / 50-60	220-240 / 50-60
Efficiency energy class [1]	A	A	A	A	A	A
Energy consumption conventional [1] kWh/MJ	0,88	0,718	0,85	0,85	1,59 / 5,71	1,59 / 5,71
Energy consumption fan forced [1] kWh/MJ	0,80	0,98	0,80	0,80	1,77 / 6,37	-
DIMENSIONS						
Product HxWxD mm	590x597x543	590x597x543	590x597x543	590x597x543	590x597x543	590x597x543
Built-in HxWxD mm	583x554x564	583/585x554/564x550	583/585x554/564x550	583/585x554/564x550	583/585x554/564x550	583/585x554/564x550
Package HxWxD mm	700x640x640	690x650x650	690x650x650	690x650x650	690x650x650	690x650x650

[1] from January 2015, according to regulation 65/2014

Colours legend: BK= Black IX= St. steel WH= White

TECHNICAL FEATURES OVENS

	GFEG	GFM52	GFMF	GFMG	GF9W
Collection	Excellence	Metropol	Metropol	Metropol	Excellence
Type	Gas / Gas Grill	Multifunction	Static Gas/Electric Grill	Static Gas / Gas Grill	Gas / Gas Grill + fan
Colour	IX	IX - WH - BK	IX - WH - BK	WH - BK	IXN
Supply	21 (Natural gas G20)	Electric	21 (Natural gas G20)	21 (Natural gas G20)	21 (Natural gas G20)
FUNCTIONS					
Programs number	5	5	5	5	10
Light	•	-	•	•	•
Pizza	-	-	-	-	-
Pre-heating	-	-	-	-	-
Traditional cooking	-	•	-	-	-
Bottom element	-	•	-	-	-
Bottom element + fan	-	•	-	-	-
Upper element	-	-	-	-	-
Grill	-	-	•	-	-
Grill + upper element (double grill)	-	-	-	-	-
Double grill + fan	-	-	-	-	-
Double grill + turnspit	-	-	-	-	-
Double grill + fan + turnspit	-	-	-	-	-
Grill + fan	-	•	-	-	-
Grill + turnspit	-	-	•	-	-
Grill + fan + turnspit	-	-	-	-	-
Static + fan	-	•	-	-	-
Multifunction (circular + fan)	-	-	-	-	-
Defrosting	-	-	-	-	•
Upper element + fan	-	-	-	-	-
Turnspit	-	-	-	-	-
Gas	•	-	•	•	•
Grill Gas	•	-	-	•	•
Grill Gas + fan	-	-	-	-	•
Grill Gas + turnspit	•	-	-	•	•
Grill Gas + turnspit + fan	-	-	-	-	•
Gas + fan	-	-	-	-	•
Gas + turnspit	•	-	•	•	•
Gas + turnspit + fan	-	-	-	-	•
Low temp	-	-	-	-	-
PROGRAMMING					
Clock-Oven Control System	Minute minder 60’	Timer 120’ end of cooking	Minute minder 60’	Minute minder 60’	Minute minder 60’
Preset Temperature	-	-	-	-	-
OVEN CAVITY					
Black enamel	-	-	-	-	•
Titanium enamel	•	•	•	•	-
OVEN CAVITY EQUIPMENT					
n° grids	1	1	1	1	2
n° driptray	1	1	1	1	1
Turnspit	•	-	•	•	•
n° level with telescopic rails	-	-	-	-	-
Other accessories	-	-	-	-	-
TECHNICAL FEATURES					
Embossed	-	•	•	•	-
Smooth sides with chromed racks	•	-	-	-	•
n° door glass	3	2	2	2	2
Glass Door Type	Full glass flat	Full glass flat	Full glass flat	Full glass flat	Full glass flat
Removable door glass	-	-	-	-	-
Cold door	-	-	-	-	-
Tangential cooling fan	•	•	•	•	•
Security gas valve	•	-	•	•	-
n° lamps	1 x 25 W	1 x 25 W	1 x 25 W	1 x 25 W	1 x 25 W
Net volume lt	66	60	65	62	88
Power W	50	2.668	1.350	54	-
Voltage/Frequency V/Hz	220-240 / 50-60	220-240 / 50-60	220-240 / 50-60	220-240 / 50-60	220-240 / 50-60
Efficiency energy class [1]	A	A	A	A	A
Energy consumption conventional [1] kWh/MJ	1,59 / 5,71	0,88	1,59 / 5,71	1,59 / 5,71	2,00 / 7,2
Energy consumption fan forced [1] kWh/MJ	-	0,80	-	-	2,05 / 7,4
DIMENSIONS					
Product HxWxD mm	590x597x543	590x597x543	590x597x543	590x597x543	895x594x551
Built-in HxWxD mm	583/585x554/564x550	583/585x554/564x550	583/585x554/564x550	583/585x554/564x550	860x595x560
Package HxWxD mm	690x650x650	690x650x650	690x650x650	690x650x650	950x660x660

[1] from January 2015, according to regulation 65/2014

Colours legend: BK= Black IX-IXN= St. steel WH= White

	GF9F	GF9G	GF993	GFP993
Collection	Excellence	Excellence	Excellence	Contemporaneo
Type	Static Gas/Electric Grill	Static Gas/Gas Grill	Multifunction	Multifunction
Colour	IXN - BKN	IXN - BKN	IXN	IX
Supply	21 (Natural gas G20)	21 (Natural gas G20)	Electric	Electric
FUNCTIONS				
Programs number	5	5	9	9
Light	•	•	•	•
Pizza	-	-	•	•
Pre-heating	-	-	-	-
Traditional cooking	-	-	•	•
Bottom element	-	-	•	•
Bottom element + fan	-	-	-	-
Upper element	-	-	-	-
Grill	•	-	•	•
Grill + upper element (double grill)	-	-	•	•
Double grill + fan	-	-	-	-
Double grill + turnspit	-	-	-	-
Double grill + fan + turnspit	-	-	-	-
Grill + fan	-	-	•	•
Grill + turnspit	•	-	-	-
Grill + fan + turnspit	-	-	-	-
Static + fan	-	-	•	•
Multifunction (circular + fan)	-	-	•	•
Defrosting	-	-	-	-
Upper element + fan	-	-	-	-
Turnspit	-	-	-	-
Gas	•	•	-	-
Grill Gas	-	•	-	-
Grill Gas + fan	-	-	-	-
Grill Gas + turnspit	-	•	-	-
Grill Gas + turnspit + fan	-	-	-	-
Gas + fan	-	-	-	-
Gas + turnspit	•	•	-	-
Gas + turnspit + fan	-	-	-	-
Low temp	-	-	-	-
PROGRAMMING				
Clock-Oven Control System	Minute minder 60’	Minute minder 60’	Electronic programmer	Touch electronic programmer
Pre set Temperature	-	-	-	-
OVEN CAVITY				
Black enamel	•	•	•	•
Titanium enamel	-	-	-	-
OVEN CAVITY EQUIPMENT				
n° grids	2	2	2	2
n° driptray	1	1	1	1
Turnspit	•	•	•	•
n° level with telescopic rails	-	-	-	-
Other accessories	-	-	-	1 Pastry tray (15 mm)
TECHNICAL FEATURES				
Embossed	-	-	-	-
Smooth sides with chromed racks	•	•	•	•
n° door glass	2	2	3	3
Glass Door Type	Full glass flat	Full glass flat	Full glass flat	Full glass flat
Removable door glass	-	-	-	-
Cold door	-	-	•	•
Tangential cooling fan	•	•	•	•
Security gas valve	-	-	-	-
n° lamps	1 x 25 W	1 x 25 W	2 x 25 W	2 x 25 W
Net volume lt	105	95	89	89
Power W	-	-	2.700	3.500
Voltage/Frequency V/Hz	220-240 / 50-60	220-240 / 50-60	220-240 / 50-60	220-240 / 50-60
Efficiency energy class (1)	A	A	A	A
Energy consumption conventional (1) kWh/MJ	2,00	2,00	0,98	0,98
Energy consumption fan forced (1) kWh/MJ	1,00	1,00	1,05	1,05
DIMENSIONS				
Product HxWxD mm	895x594x551	895x594x551	893x477x538	893x477x538
Built-in HxWxD mm	860x595x560	860x595x560	860x480x860	860x480x860
Package HxWxD mm	950x660x660	950x660x660	980x690x560	980x690x560

(1) from January 2015, according to regulation 65/2014

Colours legend: BKN= Black IX-IXN= St. steel WHN= White

TECHNICAL FEATURES OVENS

		GMC66	GFCS16	GFCS86	GFCM96
Collection		Contemporaneo	Contemporaneo	Contemporaneo	Contemporaneo
Dimension	mm	600x450	600x450	600x450	600x450
Type		Compact 45 cm combi microwave	Compact 45 cm steam oven	Compact 45 cm combi steam oven	Compact 45 cm multifunction
Colour		BK	BK	BK	BK
MAIN FEATURES					
Functions		6 (MW, Grill, Convection, MW+Grill, MW+Convection, Grill+Fan)	4 + 1 (Steam, Regeneration, Cleaning, Descaling) + Sterilisation	5 (Steam, Hot air, Grill, Steam+hot-air, Grill+hot-air)	9 (Pizza, Traditional cooking, Bottom element, Grill, Double grill + fan, Static + fan, Multifuntion (circular+fan), Defrosting, Grill + Bottom)
Oven Capacity	lt	32	35	32	40
FEATURES					
Digital clock		•	•	•	•
Timer		Electronic 0 to 90´	Electronic 0 to 90´	Electronic 0 to 90´	•
Defrost functions by time		•	•	•	-
Defrost functions by weight		•	•	-	-
Controls		Digital touch control	Digital touch control	Digital touch control	Digital touch control
Auto menus		3	3	3	-
Power levels		5	4	-	-
Temperature levels	°C	-	-	40 - 60 - 100	-
Microwave power	kW	1,000	-	-	-
Grill power	kW	1,500	-	1,200	1,100/2,600
Convection power	kW	1,700	-	-	2,150
Turbo power		-	-	1,600	1,800
Maximum power	kW	2,750	1,000	2,900	2,973
Combi Microwave / Grill		•	-	-	-
Inner light		Halogen	•	•	Halogen
Power cord with plug		•	•	•	-
End cooking signal		•	•	•	•
Preset function		•	•	3 memories	• (preset temperature)
CAVITY AND SAFETY					
Interior cavity		St. steel	St. steel	St. steel	Titanium ETC (AA)
n° glass		3	2	3	3
Safety child lock		•	•	•	•
Tangential cooling fan		•	•	•	•
ACCESSORIES					
Smooth sides with chromed racks		-	• (4 levels)	• (4 levels)	•
Enamelled tray		-	-	-	2 (regular + deep)
Rotary plate		1 x ø 32 cm (glass)	-	-	-
Inox tray		-	1 Perforated/ 1 non perforated (40 and 20 mm)	1 Perforated/ 1 non perforated (40 and 20 mm)	1 grid
Glass tray		1	-	-	-
Water tank	lt	-	1,4	1,4	-
Telescopic grids		-	-	-	1
Grids		1	-	-	-
TECHNICAL FEATURES					
Voltage/Frequency	V/Hz	220-240 / 50	220-240 / 50	230-240 / 50	220-240 / 50-60
Plug Type		Schucko	Schucko	Schucko	-
Efficiency energy class [1]		-	-	A+	A
Energy consumption conventional [1]	kWh/MJ	-	-	-	
Energy consumption fan forced [1]	kWh/MJ	-	-	0,44	
Net Oven Capacity	lt	32	35	32	40
WEIGHTS & DIMENSION					
Product WxDxH	mm	595x542x455	595x472x455	595x472x455	595x542x455
Built-in WxHxD	mm	560-568x450x542	560-568x450x542	560-568x450x542	560-568x450x542
Cavity WxDxH	mm	420x390x210	420x390x210	420x390x210	-

[1] from January 2015, according to regulation 65/2014

		GFCDN	GFCWD
Collection		Contemporaneo	Contemporaneo
Type		Accessories	Accessories
Colour		IX	IX
MAIN FEATURES			
N° of dish servings/settings		6	6
N° of dinner plates Ø28 cm		20	20
Useful height	cm	10	10
Input power	W	-	430
Adjustable thermostat	°C	-	30-70
Thermostat control		-	Electromechanic
Thermal protection at 110 °C		-	•
Illuminated ON /OFF switch		-	•
Anti-sliding mat		•	•
Opening system		push / pull	push / pull
WEIGHTS & DIMENSIONS			
Product HxWxD	mm	139x595x542	139x595x542
Built-in HxWxD	mm	140x595x542	140x 595x542
Packed HxWxD	mm	250x645x670	250x645x670
Weights Gross / net	kg	20,3 / 18,0	20,3 / 18,0
TECHNICAL FEATURES			
Voltage/Frequency	V/Hz	-	220-240 / 50-60
Cable length		-	1,5 m

Colours legend: BK= Black IX= St. steel WH= White

TECHNICAL FEATURES MICROWAVE OVENS

		GMI253	GMI203
Type		Built-in microwave	Built-in microwave
Colour		IX	IX
MAIN FEATURES			
Oven Capacity	lt	25	20
Functions		3	3
Door Opening		Push button	Push button
BASIC FEATURES			
Digital clock		•	•
Timer	m	0 to 95’ with sound signal	digital 95’
Rotary plate		31,5 cm	24,5 cm
Defrost functions by time		•	•
Defrost functions by weight		•	•
Controls		digital	easy-tronic
Auto menus		8	•
Power levels		5	5
Microwave power	W	900	800
Safety child lock		•	•
Rack to cook "au gratin"		•	-
Inner light		•	•
Adjustable feet		•	-
Power cord with plug		•	-
End cooking signal		•	•
Preset function		-	•
Interior Cavity		St. steel	St. steel
TECHNICAL FEATURES			
Voltage/Frequency	V/Hz	230 / 50	230 / 50
WEIGHTS & DIMENSIONS			
Product with frame WxDxH	mm	594x388x390	595x316x382
Built-in WxDxH	mm	see technical draw	see technical draw
Cavity WxDxH	mm	328x368x226	295x315,8x218

Colours legend: IX= St. steel

TECHNICAL FEATURES INDUCTION HOBS

		GTIP14BK	GTIP84BK	GTI642	GTI632
Width	cm	100	80	60	60
Type		Induction	Induction	Induction	Induction
Colours		Black glass	Black glass	Black glass	Black glass
SPECIFICATION					
Type of control		4 Sliders touch control	1 Slider touch control	Touch control	Touch control
Controls position		Front	Front	Front	Front
Levels of power	n°	9	9	9	9
Front left heating element	mm/W	Ø 210 - 2.900/3.700	Ø 280 - 2.600/3.700	Ø 190 - 1.400/2.000	Ø 190 - 1.400/2.000
Rear left heating element	mm/W	Ø 210 - 2.900/3.700	Ø 180 - 2.300/3.000	Ø 160 - 1.200/1.400	Ø 160 - 1.200/1.400
Central heating element	mm/W	-	-	-	-
Rear right heating element	mm/W	Ø 210 - 2.900/3.700	Ø 180 - 2.300/3.000	Ø 200 - 2.300/3.000	Ø 250 - 2.300/3.000
Front right heating element	mm/W	Ø 210 - 2.900/3.700	Ø 210 - 2.900/3.700	Ø 160 - 1.200/1.400	-
FEATURES					
Total power	W	7.400	7.400	7.100	6.400
On/Off		•	•	•	•
Stop&Go		•	•	-	-
Booster		4 double	4 double	•	•
Heat up		•	•	-	-
Timer		•	•	•	•
Minute Minder		•	•	•	•
Automatic temperatures	°C	42 - 70 - 94	42 - 70	-	-
Pot diameter detector/ Pan detection		•	•	•	•
Residual Heat		•	•	•	•
Child safety lock (Locking touch)		•	•	•	•
Overflow safety device		•	•	•	•
Automatic Stop		•	•	•	•
Power management		•	•	•	•
Power cord		•	•	•	•
Cable length	mm	1500	1500	1120	1120
Scraper		-	-	•	•
Voltage/Frequency	V/Hz	220-240 / 50-60	220-240 / 50-60	220-230 / 50-60	220-230 / 50-60
DIMENSIONS					
Product WxDxH	mm	1000x410x49	780x520x49	580x510	580x510
Built-in WxDxH	mm	985x395	750x490	560x490	560x490

		GTIP42BK	GTIPW41BK	GTPN42BK	GTI322
Width	cm	38	38	38	30
Type		Induction	Induction wok	Teppanyaki	Induction
Colours		Black glass	Black glass	St. steel grill plate	Black glass
SPECIFICATION					
Type of control		2 Sliders touch control	1 Slider touch control	Touch control	Touch control
Controls position		Front	Front	Front	Front
Levels of power	n°	9	9	9	9
Front left heating element	mm/W	Ø 220x180 - 2.100/2.600/3.700	Ø 310 - 2.300/3.000	Ø 1.400	Ø 160 - 1.400
Rear left heating element	mm/W	Ø 220x180 - 2.100/2.600/3.700	-	Ø 1.400	Ø 200 - 1.400/2.000 Ø
Central heating element	mm/W	-	-	-	-
Rear right heating element	mm/W	-	-	-	-
Front right heating element	mm/W	-		-	-
FEATURES					
Total power	W	3.700	3.000	2.800	3.400
On/Off		•	•	-	•
Stop&Go		•	•	-	-
Booster		•	•	-	•
Heat up		•	•	-	-
Timer		•	•	•	•
Minute Minder		•	•	•	•
Automatic temperatures	°C	42 - 70 - 94	42 - 70 - 94	-	-
Pot diameter detector/ Pan detection		•	•	-	•
Residual Heat		•	•	•	•
Child safety lock (Locking touch)		•	•	•	•
Overflow safety device		•	•	•	•
Automatic Stop		•	•	•	•
Power management		•	•	•	-
Power cord		•	•	•	•
Cable length	mm	1.500	1.500	1.500	1.500
Scraper		-	-	-	-
Voltage/Frequency	V/Hz	220-240 / 50-60	220-240 / 50-60	220-240 / 50-60	220-240 / 50-60
DIMENSIONS					
Product WxDxH	mm	520x380x48	520x380x121	520x380x64	290x510
Built-in WxDxH	mm	490x360	490x370	490x360	264x482

TECHNICAL FEATURES CERAMIC HOBS

		GTH96TIX - GTH96T	GTH75TCIX - GTH75TC	GTH64TIX - GTH64TF	GTH64TCIX - GTH64TC
Size	cm	90	75	60	60
Type		Ceramic glass	Ceramic glass	Ceramic glass	Ceramic glass
Glass colour		Black: with frame/no frame	Black: with frame/no frame	Black: with frame/no frame	Black: with frame/no frame
FEATURES					
Controls		Touch	Touch	Touch	Touch
Total power	W	8.100	6.700	6.400	6.000
SPECIFICATION					
Extensible hotplates		2	2	-	-
Nr of power levels		9	9	9	9
Controls position		Front	Front	Front	Front
Front left heating element	mm/W	Ø 145 - 1.200	Ø 120/210 - 700/2.100	Ø 210 - 2.200	Ø 180 - 1.800
Rear left heating element	mm/W	Ø 170/265 - 1.400/2.200	Ø 145 - 1.200	Ø 145 - 1.200	Ø 145 - 1.200
Central heating element	mm/W	Ø 180 - 1.800	-	-	-
Front right heating element	mm/W	Ø 120/180 - 750/1.700	Ø 145 - 1.200	Ø 145 - 1.200	Ø 145 - 1.200
Rear right heating element	mm/W	Ø 145 - 1.200	Ø 170/265 - 1.400/2.200	Ø 180 - 1.800	Ø 180 - 1.800
High-light		5	4	4	4
FEATURES					
Timer		•	•	•	-
Heat up		•	•	•	•
Electric cable		•	•	•	•
Voltage/Frequency	V/Hz	220-230-240 / 50-60	220-230-240 / 50-60	220-230-240 / 50-60	220-230-240 / 50-60
Scraper		•	•	•	•
SAFETY					
Residual heat indicator		•	•	•	•
Child safety lock		•	•	•	•
Overflow safety device		•	•	•	•
Automatic stop		•	•	•	•
DIMENSIONS					
Product WxDxH	mm	900x510x48	770x510x50	580x510x48	580x510x48
Built-in WxDxH	mm	880x490x48	750x490x50	560x490x48	560x490x48

		GTHP65T	GTH63TBK	GTH64KIX	GTHP42BK	GTH32K
Size	cm	60	60	60	38	30
Type		Ceramic glass	Ceramic glass	Ceramic glass	Ceramic glass	Ceramic glass
Glass colour		Black (no frame)	Black (no frame)	Black (with frame)	Black (no frame)	Black (no frame)
FEATURES						
Frame		-	-	•	-	-
Controls		Touch	Touch	Knobs	Touch	Knobs
Total power	W	6.700	5.400	6.000	3.000	3.000
SPECIFICATION						
Extensible hotplates		2	1	-	-	-
Nr of power levels		9	9	9	9	9
Controls position		Front	Front	Side	Front	Front
Front left heating element	mm/W	Ø 210/120 - 2.100/700	Ø 180 - 1.800	Ø 180 - 1.800	Ø 155 - 1.200	Ø 145 - 1.200
Rear left heating element	mm/W	Ø 145 - 1.200	Ø 145 - 1.200	Ø 145 - 1.200	Ø 190 - 1.800	Ø 180 - 1.800
Central heating element	mm/W	-	-	-	-	-
Front right heating element	mm/W	Ø 170/265 - 1.400/2.200	-	Ø 145 - 1.200	-	-
Rear right heating element	mm/W	Ø 145 - 1.200	Ø 275/210 - 2.400/1.500	Ø 180 - 1.800	-	-
High-light		4	3	4	2	2
FEATURES						
Memory		-	-	-	•	-
Timer		•	•	-	•	-
Heat up		•	-	-	•	-
Electric cable		•	•	•	•	•
Voltage/Frequency	V/Hz	220-240 / 50-60	220-230-240 / 50-60	220-230-240 / 50-60	220-240 / 50-60	220-230-240 / 50-60
Scraper		•	•	•	-	•
SAFETY						
Residual heat indicator		•	•	•	•	•
Child safety lock		•	•	-	•	-
Overflow safety device		•	•	-	•	-
Automatic stop		•	•	-	•	-
DIMENSIONS						
Product WxDxH	mm	580x510x48	580x510x48	580x510x48	520x380x45	510x290x48
Built-in WxDxH	mm	560x490x48	560x490x48	560x490x48	490x350x41	490x270x65

TECHNICAL FEATURES CRYSTAL GAS HOBS

		GV955	GV755	GV64	GVP635H	GVP415H	GVP42H
Width	cm	90	70	60	60	38	38
Type		Crystal gas	Crystal gas	Crystal gas	Crystal gas	Crystal gas	Crystal gas
Colours		BK	BK	BK	BK	BK	BK
FEATURES							
Controls		Knobs	Knobs	Knobs	Knobs	Knobs	Knobs
Nr gas zones		5	5	4	3	1	2
Front left burner	W	1.000	1.000	3.000	1.000	-	-
Rear left burner	W	3.000	3.000	1.650	1.650	-	-
Front burner	W	3.500	3.500	-	-	5.000	1.000
Rear burner	W	-	-	-	-	-	3.000
Front right burner	W	1.650	1.650	1.000	3.500	-	-
Rear right burner	W	1.650	1.650	1.650	-	-	-
Flame failure device (FFD)		•	•	•	•	•	•
One hand ignition		•	•	•	•	•	•
Cast iron pan supports		-	-	-	•	•	•
DIMENSIONS							
Product HxWxD	mm	51x900x510	51x700x510	51x600x510	51x600x510	55x380x520	55x380x520
Built-in HxWxD	mm	50x750x480	50x550x480	50x550x480	50x550x480	350x495	350x495
Packaging HxWxD	mm	150x1000x580	150x800x580	150x700x580	150x700x580	145x440x555	145x440x555

Colours legend: BK= Black

TECHNICAL FEATURES GAS HOBS

		GT951H	GT955H	GT955	GT955N	GT96N	GT968N
Width	cm	90	90	90	90	90	90
Type		Gas	Gas	Gas	Gas	Gas	Gas
Colours		IX	IX - WH - BK	IX - WH - BK	IX - WH - BK	IX - WH - BK	IX - WH - BK
FEATURES							
Controls		Front	Front	Front	Front	Front	Front
Nr electric zones		-	-	-	-	-	2
Nr gas zones		5	5	5	5	6	4
Front left burner	W	4.500 - 800	1.000	1.000	1.000	1.000	1.000
Rear left burner	W	-	3.000	3.000	3.000	3.000	3.000
Front burner	W	1.000	3.800	3.800	3.800	1.750	Ø 180 - 2.000
Rear burner	W	1.750	-	-	-	3.000	Ø 145 - 1.500
Front right burner	W	1.750	1.750	1.750	1.750	1.750	1.750
Rear right burner	W	3.000	1.750	1.750	1.750	1.750	1.750
Flame failure device (FFD)		•	•	•	-	-	-
One hand ignition		•	•	•	•	•	•
PAN SUPPORTS							
Matt enamelled pan supports		-	-	•	•	•	•
Cast iron pan supports		•	•	-	-	-	-
DIMENSIONS							
Product HxWxD	mm	30x860x500	30x860x500	30x860x500	30x860x500	30x860x500	30x860x500
Built-in HxWxD	mm	30x830x480	30x830x480	30x830x480	30x830x480	30x830x480	30x830x480
Packaging HxWxD	mm	138x911x564	138x911x564	138x911x564	138x911x564	138x911x564	138x911x564

		GTL955	GTL955N	GTL968	GTL968N	GTS51H	GT851H
Width	cm	90	90	90	90	75	75
Type		Gas	Gas	Gas	Gas	Gas	Gas
Colours		IX - WH - BK	IX - WH - BK	IX - WH - BK	IX - WH - BK	IX	IX
FEATURES							
Controls		Side	Side	Side	Side	Front	Front
Nr electric zones		-	-	2	2	-	-
Nr gas zones		5	5	4	4	5	5
Front left burner	W	3.000	3.000	1.750	1.750	3.000	4.500 - 800
Rear left burner	W	1.750	1.750	3.000	3.000	1.750	-
Front burner	W	3.300	3.300	Ø 180 - 2.000	Ø 180 - 2.000	1.000	1.000
Rear burner	W	-	-	Ø 145 - 1.500	Ø 145 - 1.500	1.750	1.750
Front right burner	W	1.000	1.000	1.000	1.000	4.500 - 800	1.750
Rear right burner	W	1.750	1.750	1.750	1.750	-	3.000
Flame failure device (FFD)		•	-	•	-	•	•
One hand ignition		•	•	•	•	•	•
PAN SUPPORTS							
Matt enamelled pan supports		•	•	•	•	-	-
Cast iron pan supports		-	-	-	-	•	•
DIMENSIONS							
Product HxWxD	mm	30x860x500	30x860x500	30x860x500	30x860x500	70x740x500	30x740x500
Built-in HxWxD	mm	30x830x480	30x830x480	30x830x480	30x830x480	70x720x480	30x560x480
Packaging HxWxD	mm	138x911x564	138x911x564	138x911x564	138x911x564	138x791x564	138x791x564

Colours legend: BK= Black IX= St. steel WH= White

		GT842H	GT871H	GT755H	GT755	GT755N	GT731
Width	cm	75	75	70	70	70	70
Type		Gas	Gas	Gas	Gas	Gas	Gas
Colours		IX	IX	IX - WH - BK	IX - WH - BK	IX - WH - BK	IX
FEATURES							
Controls		Front	Front	Front	Front	Front	Front
Nr electric zones		-	-	-	-	-	-
Nr gas zones		4	5	5	5	5	3
Front left burner	W	4.500 - 800	1.000	1.000	1.000	1.000	4.500 - 800
Rear left burner	W	-	3.000	3.000	3.000	3.000	-
Front burner	W	1.000	4.500 - 800	3.300	3.300	3.300	-
Rear burner	W	1.750	-	-	-	-	-
Front right burner	W	3.300	1.750	1.750	1.750	1.750	1.750
Rear right burner	W	-	1.750	1.750	1.750	1.750	1.750
Flame failure device (FFD)		•	•	•	•	-	•
One hand ignition		•	•	•	•	•	•
PAN SUPPORTS							
Matt enamelled pan supports		-	-	-	•	•	•
Cast iron pan supports		•	•	•	-	-	-
DIMENSIONS							
Product HxWxD	mm	30x740x500	30x740x500	30x685x500	30x685x500	30x685x500	30x685x500
Built-in HxWxD	mm	30x560x480	30x560x480	30x560x480	30x560x480	30x560x480	30x560x480
Packaging HxWxD	mm	138x791x564	138x791x564	138x736x564	138x736x564	138x736x564	138x736x564

		GT731N	GT685H	GT64H	GT64	GT64N	GT685
Collection		Contemporaneo	Contemporaneo	Contemporaneo	Contemporaneo	Contemporaneo	Contemporaneo
Width	cm	70	60	60	60	60	60
Type		Gas	Gas	Gas	Gas	Gas	Gas
Colours		IX	IX - WH - BK	IX - WH - BK	IX - WH - BK	IX - WH - BK	IX - WH - BK
FEATURES							
Controls		Front	Front	Front	Front	Front	Front
Nr electric zones		-	-	-	-	-	-
Nr gas zones		3	4	4	4	4	4
Front left burner	W	4.500 - 800	3.800	1.000	1.000	1.000	3.800
Rear left burner	W	-	1.000	3.000	3.000	3.000	1.000
Front burner	W	-	-	-	-	-	-
Rear burner	W	-	-	-	-	-	-
Front right burner	W	1.750	1.750	1.750	1.750	1.750	1.750
Rear right burner	W	1.750	1.750	1.750	1.750	1.750	1.750
Flame failure device (FFD)		-	•	•	•	-	•
One hand ignition		•	•	•	•	•	•
PAN SUPPORTS							
Matt enamelled pan supports		•	-	-	•	•	•
Cast iron pan supports		-	•	•	-	-	-
DIMENSIONS							
Product HxWxD	mm	30x685x500	30x585x500	30x585x500	30x585x500	30x585x500	30x585x500
Built-in HxWxD	mm	30x560x480	30x560x480	30x560x480	30x560x480	30x560x480	30x560x480
Packaging HxWxD	mm	138x736x564	138x636x564	138x636x564	138x636x564	138x636x564	138x636x564

		GT685N	GT645	GT647	GT647N	GTL64	GTL64N
Width	cm	60	60	60	60	60	60
Type		Gas	Gas	Gas	Gas	Gas	Gas
Colours		IX - WH - BK	IX	IX - WH - BK	IX - WH - BK	IX - WH - BK	IX - WH - BK
FEATURES							
Controls		Front	Front	Front	Front	Side	Side
Nr electric zones		-	-	1	1	-	-
Nr gas zones		4	4	3	3	4	4
Front left burner	W	3.800	3.000	1.000	1.000	3.000	3.000
Rear left burner	W	1.000	-	3.000	3.000	1.750	1.750
Front burner	W	-	1.000	-	-	-	-
Rear burner	W	-	1.750	-	-	-	-
Front right burner	W	1.750	3.300	1.750	1.750	1.000	1.000
Rear right burner	W	1.750	-	Ø 145 - 1.500	Ø 145 - 1.500	1.750	1.750
Flame failure device (FFD)		-	•	•	-	•	-
One hand ignition		•	•	•	•	•	•
PAN SUPPORTS							
Matt enamelled pan supports		•	•	•	•	•	•
Cast iron pan supports		-	-	-	-	-	-
DIMENSIONS							
Product HxWxD	mm	30x585x500	30x585x500	30x585x500	30x585x500	30x585x500	30x585x500
Built-in HxWxD	mm	30x560x480	30x560x480	30x560x480	30x560x480	30x560x480	30x560x480
Packaging HxWxD	mm	138x636x564	138x636x564	138x636x564	138x636x564	138x636x564	138x636x564

Colours legend: BK= Black IX= St. steel WH= White

TECHNICAL FEATURES GAS/ELECTRIC HOBS AND DOMINO

		GTL647	GTL647N	GTL640	GT415H	GT42H	GT315	GT315N
Width	cm	60	60	60	37	37	30	30
Type		Gas	Gas	Electric	Gas	Gas	Gas	Gas
Colours		IX - WH	IX - WH	IX - WH	IX	IX	IX	IX
FEATURES								
Controls		Side	Side	Side	Front	Front	Front	Front
Nr electric zones		1	1	4	-	-	-	-
Nr gas zones		3	3	-	1	2	1	1
Front left burner	W	3.000	3.000	Ø 180 - 2.000	-	-	-	-
Rear left burner	W	Ø 145 - 1.500	Ø 145 - 1.500	Ø 145 - 1.500	-	-	-	-
Front burner	W	-	-	-	3.800	1.000	3.300	3.300
Rear burner	W	-	-	-	-	3.000	-	-
Front right burner	W	1.000	1.000	Ø 145 - 1.000	-	-	-	-
Rear right burner	W	1.750	1.750	Ø 180 - 1.500	-	-	-	-
Flame failure device (FFD)		•	-	-	•	•	•	-
One hand ignition		•	•	-	•	•	•	•
PAN SUPPORTS								
Matt enamelled pan supports		•	•	-	-	-	•	•
Cast iron pan supports		-	-	-	•	•	-	-
DIMENSIONS								
Product HxWxD	mm	30x585x500	30x585x500	30x585x500	33x370x500	33x370x500	30x290x510	30x290x510
Built-in HxWxD	mm	30x560x480	30x560x480	30x560x480	33x350x490	33x350x490	30x265x480	30x265x480
Packaging HxWxD	mm	138x636x564	138x636x564	138x636x564	143x430x564	143x430x564	138x342x564	138x342x564

		GT32	GT32N	GT320	GT3B	GT3F	GTH32K
Width	cm	30	30	30	30	30	30
Type		Gas	Gas	Electric	Electric	Electric	Electric
Colours		IX	IX	IX	IX	IX	IX
FEATURES							
Controls		Front	Front	Front	Front	Front	Front
Nr electric zones		-	-	2	1	1	-
Nr gas zones		2	2	-	-	-	-
Nr highlight zones		-	-	-	-	-	2
Front left burner	W	-	-	-	-	-	-
Rear left burner	W	-	-	-	-	-	-
Front burner	W	1.000	1.000	Ø 145 - 1.500	2.400	2.300	Ø 140 - 1.200
Rear burner	W	3.000	3.000	Ø 180 - 2.000	-	-	Ø 180 - 1.800
Front right burner	W	-	-	-	-	-	-
Rear right burner	W	-	-	-	-	-	-
Flame failure device (FFD)		•	-	-	-	-	-
One hand ignition		•	•	-	-	-	-
PAN SUPPORTS							
Matt enamelled pan supports		•	•	-	•	-	-
Cast iron pan supports		-	-	-	-	-	-
DIMENSIONS							
Product HxWxD	mm	30x290x510	30x290x510	30x290x510	50x290x510	155x290x510	40x290x510
Built-in HxWxD	mm	30x265x480	30x265x480	30x265x480	50x265x480	155x265x480	40x265x480
Packaging HxWxD	mm	138x342x564	138x342x564	138x342x564	138x342x564	138x342x564	138x342x564

Colours legend: BK= Black IX= St. steel WH= White

		GHB127	GHIB98	GHS98	GHS68
Dimensions	cm	120	90	90	60
Type		Wall	Island	Wall Glass	Wall Glass
Colour		IX	IX	IX	IX
FEATURES					
Suction power	m³/h	740	600 (700)	735	735
Noise level - max speed Power	dBa	70	50	69	69
Noise level - speed level 1	dBa	65	-	59	59
Nº of blower		1	1	1	1
Speeds		3+1	3+1	2+1	2+1
Booster		•	•	•	•
Delay start		•	-	-	-
Clean Air		•	-	-	-
Saturation filter alarm		•	•	-	-
Lamps		3x1,5W led	4x20W halogen	2x20W halogen	2x20W halogen
Perimetral aspiration		-	-	-	-
Grease filters (Aluminium)		4 baffle filters	•	2	2
Grease filters (Acrylic)		-	-	-	-
Grease filters (Metalic)		-	-	-	-
Carbon filters		•	•	1	1
Controls		Electronic lighted button	Electronic lighted button	Electronic lighted button	Electronic lighted button
Air outlet size	mm	Ø 150 / 120	Ø 150 / 120	Ø 150 / 120	Ø 150 / 120
Plug		-	-	-	-
Cable length	cm	100	120	150	150
No return valve		•	•	•	•
Motor power	W	250	250	250	250
Voltage/Frequency	V/Hz	230-240 / 50-60	220-240 / 50	230-240 / 50	230-240 / 50
Efficiency energy class [1]		A	D	C	C
DIMENSIONS					
Product HxWxD	mm	855-1320x1200x500	see drawing	see drawing	see drawing
Packing HxWxD	mm	615x1295x 600	-	1020x510x655	-

		GHR98	GHB98	GHP98	GHP68
Dimensions	cm	90	90	90	60
Type		Wall Curved	Wall Box	Wall Chimney	Wall Chimney
Colour		IX	IX	IX	IX
FEATURES					
Suction power	m³/h	735	735	735	735
Noise level - max speed Power	dBa	69	69	69	69
Noise level - speed level 1	dBa	59	59	59	59
Nº of blower		1	1	1	1
Speeds		2+1	2+1	3+1	3+1
Booster		•	•	•	•
Delay start		-	-	•	•
Clean Air		-	-	-	-
Saturation filter alarm		-	-	•	•
Lamps		2x20W halogen	2x20W halogen	2x20W halogen	2x20W halogen
Perimetral aspiration		-	-	-	-
Grease filters (Aluminium)		2	3	3	3
Grease filters (Acrylic)		-	-	-	-
Grease filters (Metalic)		-	-	-	-
Carbon filters		2	1	2	2
Controls		Electronic lighted button	Electronic lighted button	Electronic lighted button	Electronic lighted button
Air outlet size	mm	Ø 150 / 120	Ø 150 / 120	Ø 120	Ø 120
Plug		-	-	-	-
Cable length	cm	150	150	150	150
No return valve		•	•	•	•
Motor power	W	250	250	250	250
Voltage/Frequency	V/Hz	230-240 / 50	230-240 / 50	230-240 / 50	230-240 / 50
Efficiency energy class [1]		C	C	C	C
DIMENSIONS					
Product HxWxD	mm	see drawing	see drawing	900x500x280	600x500x280
Packing HxWxD	mm	985x470x625	985x470x625	958x425x560	658x425x560

[1] from January 2015, according to regulation 65/2014

Colours legend: BK= Black IX= St. steel WH= White

TECHNICAL FEATURES HOODS

		GHP94	GHP64	GHC95	GHC65
Dimensions	cm	90	60	90	60
Type		Wall Chimney	Wall Chimney	Standard	Standard
Colour		IX	IX	IX	IX
FEATURES					
Suction power	m³/h	435	435	360	360
Noise level - max speed Power	dBa	63	63	65	65
Noise level - speed level 1	dBa	51	51	55	55
Nº of blower		1	1	2	2
Speeds		3	3	3	3
Booster		-	-	-	-
Delay start		-	-	-	-
Clean Air		-	-	-	-
Saturation filter alarm		-	-	-	-
Lamps		2x28W candle halogen	2x28W candle halogen	2x28W	2x28W
Perimetral aspiration		-	-	-	-
Grease filters (Aluminium)		3	2	-	-
Grease filters (Acrylic)		-	-	-	-
Grease filters (Metalic)		-	-	1	1
Carbon filters		2	2	1	1
Controls		Push button	Push button	Push button	Push button
Air outlet size	mm	Ø 120	Ø 120	Ø 123	Ø 123
Plug		-	-	-	-
Cable length	cm	150	150	175	175
No return valve		•	•	•	•
Motor power	W	135	135	300	300
Voltage/Frequency	V/Hz	230-240 / 50	230-240 / 50	220-240 / 50	220-240 / 50
Efficiency energy class [1]		E	E	F	F
DIMENSIONS					
Product HxWxD	mm	900x500x280	600x500x280	900x495x140	600x495x140
Packing HxWxD	mm	935x420x555	635x420x555	965x195x560	665x195x560

		GHL90	GHL60	GHE90	GHE60
Dimensions	cm	90	60	90	60
Type		Undercabinet	Undercabinet	Undercabinet	Undercabinet
Colour		IX - WH - BK	IX - WH - BK	SI	SI
FEATURES					
Suction power	m³/h	207	207	171	171
Noise level - max speed Power	dBa	61	61	61	61
Noise level - speed level 1	dBa	-	-	-	-
Nº of blower		1	1	1	1
Speeds		3	3	3	3
Booster		-	-	-	-
Delay start		-	-	-	-
Clean Air		-	-	-	-
Saturation filter alarm		-	-	-	-
Lamps		1x28W	1x28W	1x28W	1x28W
Perimetral aspiration		-	-	-	-
Grease filters (Aluminium)		-	-	-	-
Grease filters (Acrylic)		1	1	1	1
Grease filters (Metalic)		-	-	-	-
Carbon filters		1	1	1	1
Controls		Slider	Slider	Slider	Slider
Air outlet size	mm	Ø 120	Ø 120	Ø 120	Ø 120
Plug		-	-	-	-
Cable length	cm	100	100	100	100
No return valve		-	-	-	-
Motor power	W	110	110	110	110
Voltage/Frequency	V/Hz	220-240 / 50	220-240 / 50	220-240 / 50	220-240 / 50
Efficiency energy class [1]		E	E	E	E
DIMENSIONS					
Product HxWxD	mm	see drawing	see drawing	see drawing	see drawing
Packing HxWxD	mm	960x230x610	630x230x610	990x243x391	625x180x326

[1] from January 2015, according to regulation 65/2014

Colours legend: BK= Black IX= St. steel WH= White SI= Metallic Silver

MARKETING
Glem Gas

AD & GRAPHIC DESIGN
Ikos

Glem Gas S.p.A. reserves the right unilaterally at any time to change its own products without altering the catalogue contents accordingly.

012T12.2 09/2016

GLEM

Glem Gas S.p.A.
via Modenese, 4266
41018 San Cesario S.P.
Modena - Italy
tel. +39 059 959111
fax +39 059 959150
info@glemgas.com
www.glemgas.com