GLEM

BUILT

BUILT-IN

BUILT-IN

10 Contemporaneo

12 **OVENS**
26 **COMPACT OVEN**
28 **INDUCTION HOBS**
36 **CERAMIC GLASS HOBS**
44 **CRYSTAL GAS HOBS**
52 **GAS HOBS**
62 **DOMINO HOBS**
72 **HOODS**

84 Tradizione

86 **OVENS**
100 **HOBS**
110 **HOODS**

116 Tech info

PROJECT *and* EMOTION MADE *in* ITALY

Glem brand belongs to Glem Gas group established in 1959 in San Cesario, a few kilometers from Modena, in the heart of Emilia and of this territory it proudly carries on the culinary excellence, the artistic tradition, the passion for the land, the spirit of innovation and the craftsmanship of its people. The technological and aesthetic content of our products represents our absolute value, a rigorous and emblematic image of Made in Italy. Materials, shapes and technologies of Glem products are developed thanks to our research and development department through the collaboration with designers of international renown. All our products are assembled in our local premises and are submitted to strict quality controls so as to grant excellent performances both technological and aesthetic.

IO CUCINO *con* GLEM

Glem represents the Italian excellence in realizing cooking appliances at an international level. Our product range, wide and varied, follows and brings forward the market development so as to grant the highest quality world-wide. Made in Italy is for us a synonym of style, design and product quality, attention for the environment and for the people. Passion is the essential ingredient for every successful recipes. Glem has changed how to conceive the kitchen through a new aesthetic function of the appliances. It is a creative room where design and functionality allow to express the own taste and style thanks to the versatility of a range, aesthetically refined and simple to use, in position to satisfy any tastes and needs.

Io Cucino
con
GLEM
MADE IN ITALY

GLOBAL *and* SMART CITIZENS

We develop products according to the contemporary living, favouring materials and innovative shapes which grant charming aesthetic, ergonomic shapes, ease of use and maintenance. Our appliances become object of furniture able to perfectly adapt to the last fashion trends and interior design. Pragmatism, experience and creativity are the ingredients which have brought Glem to receive prestigious awards and praises in the design area.

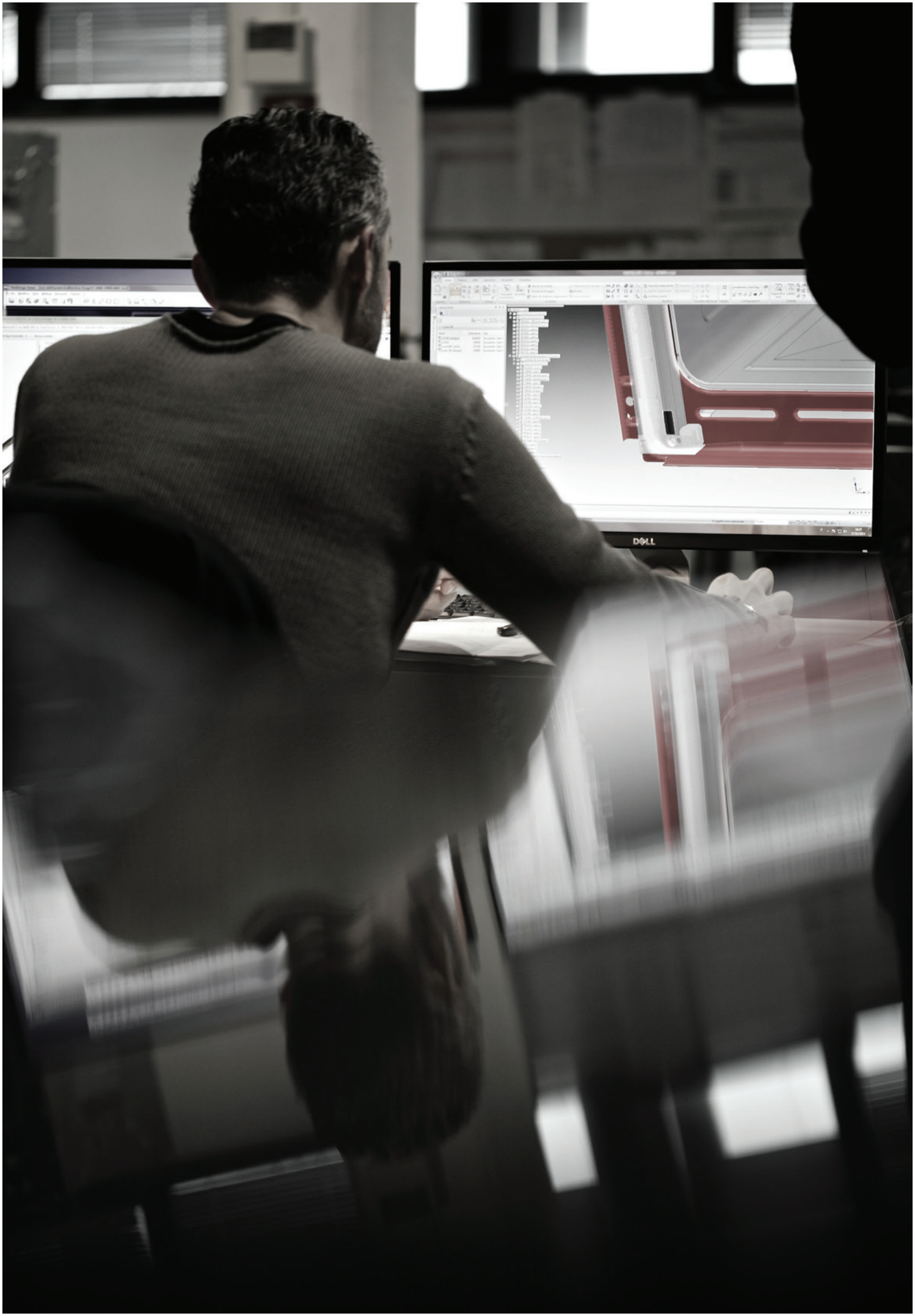
DELL

ELEGANT TEC

Contemporaneo

CHNOLOGY

12:30
MENU
GLEM

OVENS

Contemporaneo

MODERN LOOK, HIGH PERFORMANCE

GLEM
GLEM
michel roux
sauces

180°
1200
GLEM

GFP16IX

Performance and features

Multifunction oven
Full touch electronic programmer
Preset temperature
64 lt oven capacity
Tangential cooling fan
2 shelves position with telescopic grids
Easy to clean enamelled cavity

Functions

13 functions

Safety

Triple glass cold door

Details

Titanium enamelled cavity
Full flat glass inner door

GFP16IX
Black / St. steel frame

GFP13IX

Performance and features

Multifunction oven
Full touch electronic LCD display
Preset temperature
64 lt oven capacity
Tangential cooling fan
2 shelves position with telescopic grids
Easy to clean enamelled cavity

Functions

11 functions

Safety

Triple glass cold door

Details

Pop-out knobs
Titanium enamelled cavity
Full flat glass inner door

GFP13IX
Black / St. steel frame

GFP13WH

Performance and features

Multifunction oven
Full touch electronic LCD display
Preset temperature
64 lt oven capacity
Tangential cooling fan
2 shelves position with telescopic grids
Easy to clean enamelled cavity

Functions

11 functions

Safety

Triple glass cold door

Details

Pop-out knobs
Titanium enamelled cavity
Full flat glass inner door

GFP13WH
White / St. steel frame

GFP93IX

Performance and features

Multifunction oven
Digital touch programmer
64 lt oven capacity
Tangential cooling fan
2 shelves position with telescopic grids
Easy to clean enamelled cavity

Functions

9 functions

Safety

Triple glass cold door

Details

Pop-out knobs
Titanium enamelled cavity
Full flat glass inner door

GFP93IX
Black / St. steel frame

GFP93IXL

Performance and features

Multifunction oven
Electronic touch programmer
64 lt oven capacity
Tangential cooling fan
2 shelves position with telescopic grids
Easy to clean enamelled cavity

Functions

9 functions

Safety

Triple glass cold door

Details

Titanium enamelled cavity
Full flat glass inner door

GFP93IXL
St. steel / St. steel frame

GLEM

GFP93BK

Performance and features

Multifunction electric oven
Electronic touch programmer
64 lt oven capacity
Tangential cooling fan
2 shelves position with telescopic grids
Easy to clean enamelled cavity

Functions

9 functions

Safety

Triple glass cold door

Details

Pop-out knobs
Titanium enamelled cavity
Full flat glass inner door

GFP93BK
Black

GFP93WH

Performance and features

Multifunction electric oven
Electronic touch programmer
64 lt oven capacity
Tangential cooling fan
2 shelves position with telescopic grids
Easy to clean enamelled cavity

Functions

9 functions

Safety

Triple glass cold door

Details

Pop-out knobs
Titanium enamelled cavity
Full flat glass inner door

GFP93WH
White

GFPW21IX

Performance and features

Multifunction gas oven (fan assisted)
Gas grill
60’ timer
60 l oven capacity
Tangential cooling fan
Smooth sides with chromed racks
Easy to clean enamelled cavity

Functions

3 functions

Safety

Triple glass cold door

Details

Titanium enamelled cavity
Full flat glass inner door

GFPW21IX
St. steel / St. steel frame

GFPV21IX

Performance and features

Multifunction gas oven (fan assisted) - multichef
Electrical grill
60’ timer
63 l oven capacity
Tangential cooling fan
Smooth sides with chromed racks
Easy to clean enamelled cavity

Functions

6 functions

Safety

Triple glass cold door

Details

Titanium enamelled cavity
Full flat glass inner door

GFPV21IX
St. steel / St. steel frame

GFS93IX

Performance and features

Multifunction oven
Electronic programmer
64 lt oven capacity
Tangential cooling fan
Smooth sides with chromed racks
Easy to clean enamelled cavity

Functions

9 functions

Safety

Triple glass cold door

Details

Titanium enamelled cavity
Full flat glass inner door
Stopsol glass

GFS93IX
St. steel

GFS53IX

Performance and features

Multifunction oven
Electronic programmer
64 lt oven capacity
Tangential cooling fan
Smooth sides with chromed racks
Easy to clean enamelled cavity

Functions

5 functions

Safety

Triple glass cold door

Details

Titanium enamelled cavity
Full flat glass inner door
Stopsol glass

GFS53IX
St. steel

GFP993IX

Performance and features

Multifunction oven - 90 cm
Electronic touch programmer
89 lt oven capacity
Tangential cooling fan
Smooth sides with chromed racks
Turnspit
Easy to clean enamelled cavity

Functions

9 functions

Safety

Triple glass cold door

Details

Pop-out knobs
Titanium enamelled cavity
Full flat glass inner door

GFP993IX
Black / St. steel frame

COMFORT *and* FUNCTIONALITY

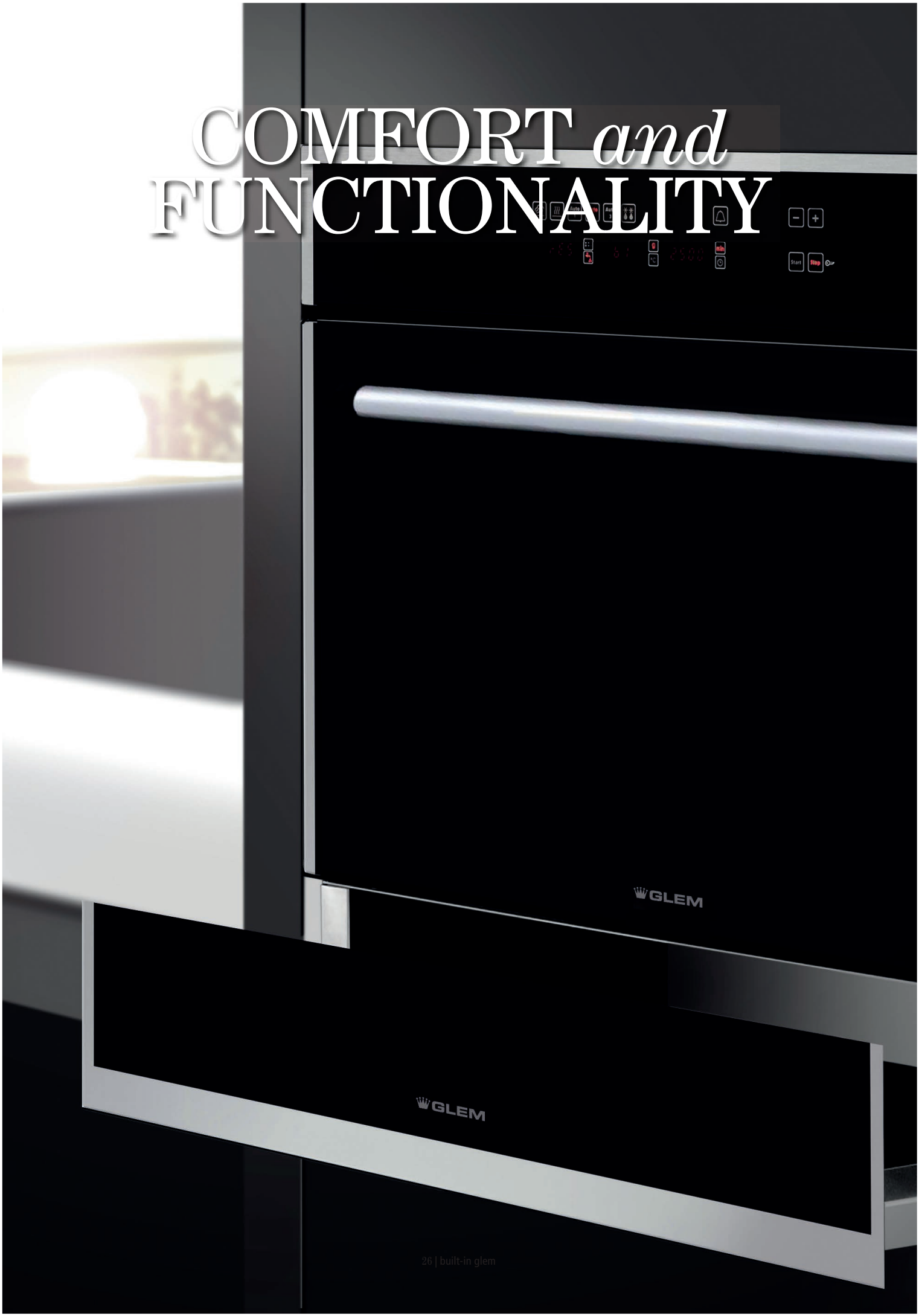

Accessorie

WARMING DRAWER

GFCS16BK

Performance and features

Compact 45 cm steam oven
Digital touch controls
35 l oven capacity
Tangential cooling fan
Water tank (1,4 lt)
Digital clock
4 power levels
32 cm rotary plate
Side racks (4 levels)

Functions

5 functions
5 automatic recipes
Electronic timer 0 to 90’ with sound signal
Defrosting by weight/time
Preset function

Safety

Child safety lock

Details

St. steel oven cavity
Drop down door

GFCS16BK
Black glass / St. steel frame

GFCWDIX

Performance and features

15 cm drawer
6 dish servings/settings
20 dinner plates (ø 28 cm)
Useful height 10 cm
Adjustable thermostat 30°-70° C
Max power 430 W

Safety

Thermal protection at 110° C
Illuminated On/Off switch

Details

St. steel (drawer) cavity
Push-pull opening system

GFCWDIX
Black / St. steel frame

INDUCTION HOBS

Contemporaneo

FAST, CLEAN *and* SAFE

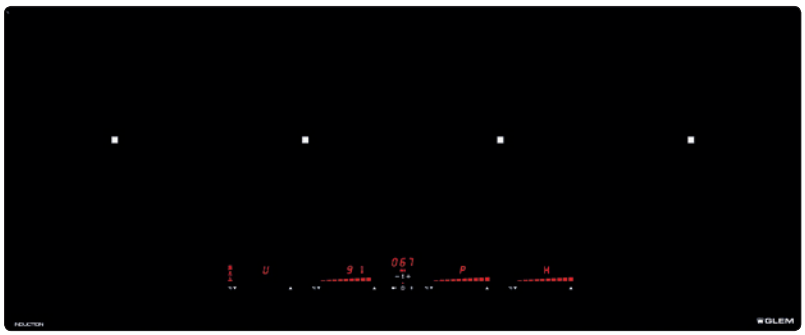

GTIP14BK

Performance and features

100 cm induction hob
4 zones aligned: to accommodate any size of pots and pans
Total power: 7.400 W
9 power levels
4 slider touch controls
Timer

Functions

Double booster: to increase the power of any cooking zone by about 75%
3 automatic temperatures
Heat up function: cooking programme featuring temporary booster

Safety

Child safety lock
Residual heat indicator
Overflow safety device
Pot diameter detector

GTIP14BK
Black ceramic glass

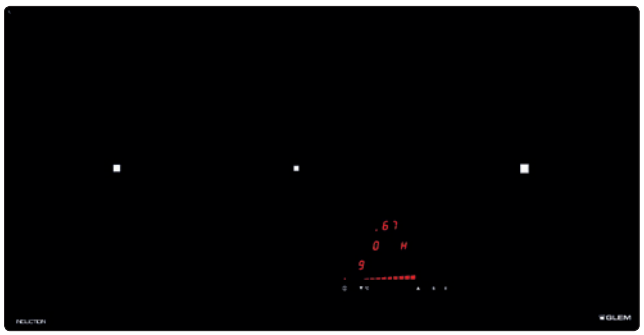

GTIP83BK

Performance and features

80 cm induction hob
3 zones aligned: to accommodate any size of pots and pans
Total power: 6.700 W
9 power levels
1 slider touch control
Timer

Functions

Booster: to increase the power of any cooking zone by about 75%
1 automatic temperatures
Heat up function: cooking programme featuring temporary booster

Safety

Child safety lock
Residual heat indicator
Overflow safety device
Pot diameter detector

GTIP83BK
Black ceramic glass

INDUCTION

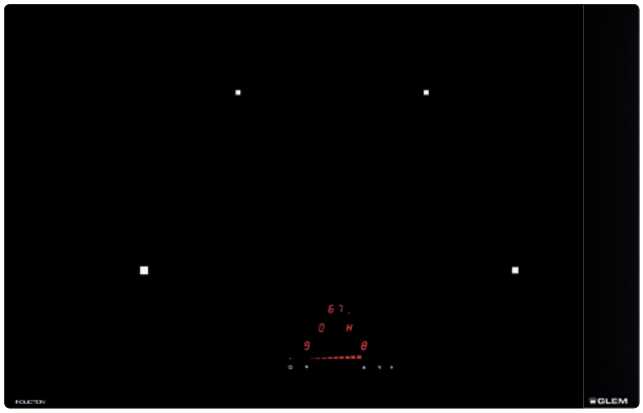

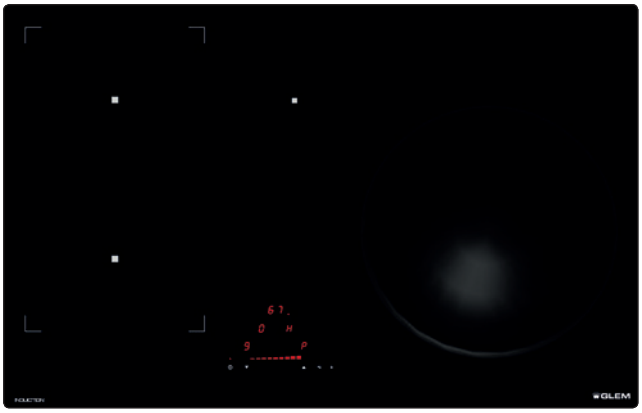

GTIP84BK

Performance and features

80 cm induction hob
4 zones: comfortable layout to accommodate big pans
Total power: 7.400 W
9 power levels
1 slider touch control
Timer

Functions

Double booster: to increase the power of any cooking zone by about 75%
2 automatic temperatures
Heat up function: cooking programme featuring temporary booster

Safety

Child safety lock
Residual heat indicator
Overflow safety device
Pot diameter detector

OSD STOP ▶GO Ø 10 cm

GTIP84BK
Black ceramic glass

GTIPW84BK

Performance and features

80 cm induction hob
4 zones
Total power: 7.400 W
9 power levels
1 slider touch control
Timer

Functions

Booster: to increase the power of any cooking zone by about 75%
3 automatic temperatures
Heat up function: cooking programme featuring temporary booster
Bridge function (left zone): allows two heating zones to be controlled and treated as one

Safety

Child safety lock
Residual heat indicator
Overflow safety device
Pot diameter detector

BRIDGE OSD STOP ▶GO Ø 10 cm

GTIPW84BK
Black ceramic glass

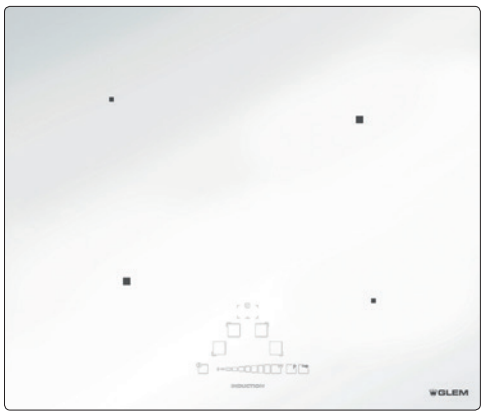

GTIP64WH

Performance and features

60 cm induction hob
4 zones
Total power: 7.100 W
9 power levels
1 slider control
Timer

Functions

Booster: to increase the power of any cooking zone by about 75%
Heat up function: cooking programme featuring temporary booster

Safety

Child safety lock
Residual heat indicator
Overflow safety device
Pot diameter detector
Balancing the cooking zones power distribution to prevent from exceeding the power limit

GTIP64WH
White ceramic glass

GTIP64BK

Performance and features

60 cm induction hob
4 zones
Total power: 7.100 W
9 power levels
1 slider control
Timer

Functions

Booster: to increase the power of any cooking zone by about 75%
Heat up function: cooking programme featuring temporary booster

Safety

Child safety lock
Residual heat indicator
Overflow safety device
Pot diameter detector
Balancing the cooking zones power distribution to prevent from exceeding the power limit

GTIP64BK
Black ceramic glass

Contemporaneo

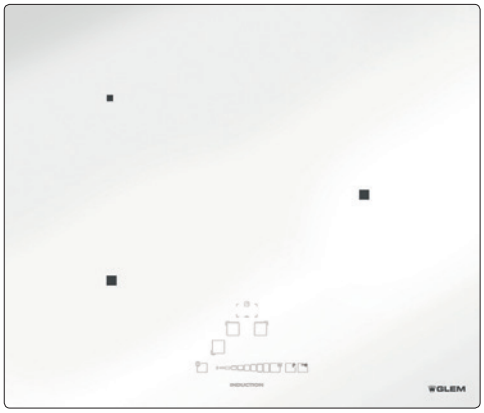

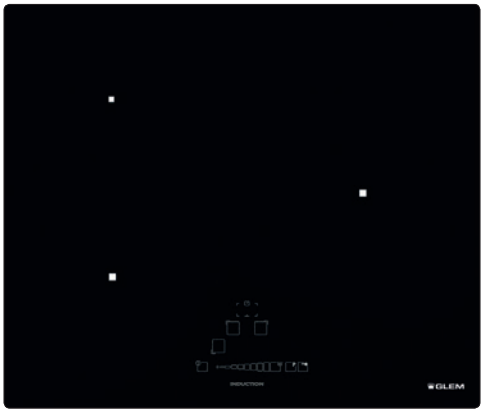

GTIP63WH

Performance and features

60 cm induction hob
3 zones
Total power: 6.700 W
9 power levels
1 slider control
Timer

Functions

Booster: to increase the power of any cooking zone by about 75%
Heat up function: cooking programme featuring temporary booster

Safety

Child safety lock
Residual heat indicator
Overflow safety device
Pot diameter detector
Balancing the cooking zones power distribution to prevent from exceeding the power limit

GTIP63WH
White ceramic glass

GTIP63BK

Performance and features

60 cm induction hob
3 zones
Total power: 6.700 W
9 power levels
1 slider control
Timer

Functions

Booster: to increase the power of any cooking zone by about 75%
Heat up function: cooking programme featuring temporary booster

Safety

Child safety lock
Residual heat indicator
Overflow safety device
Pot diameter detector
Balancing the cooking zones power distribution to prevent from exceeding the power limit

GTIP63BK
Black ceramic glass

GLEM
Dual
Dual

CERAMIC GLASS HOBS

Contemporaneo

A SLEEK LOOK

Dual

Dual

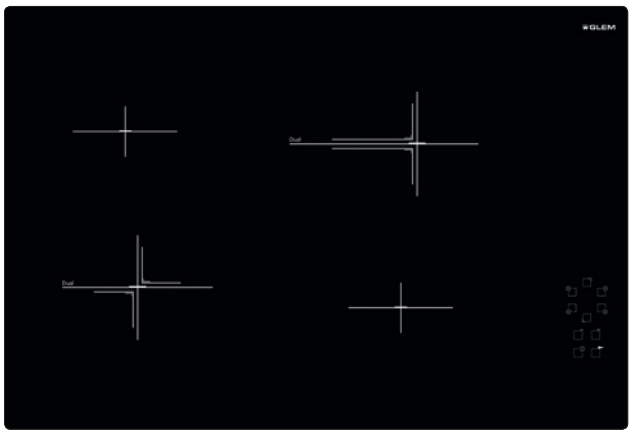

GTHP85T

Performance and features

80 cm ceramic hob
4 high-light zones (with 2 extensible hotplates):
to achieve a fast heat up time
Total power: 6.700 W
9 power levels
Touch controls
Timer

Functions

Heat up function: cooking programme featuring temporary booster

Safety

Child safety lock
Residual heat indicator
Overflow safety device
Automatic stop

Details

Scraper

GTHP85T
Black ceramic glass

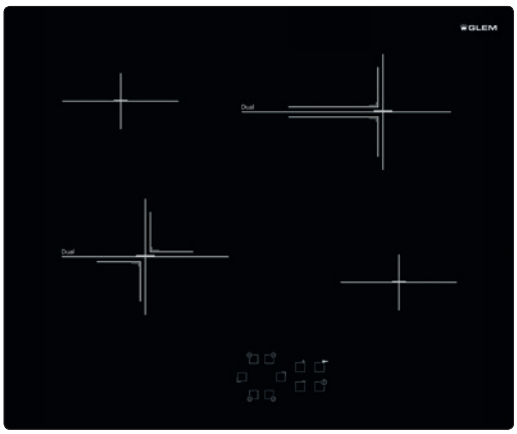

GTHP65T

Performance and features

60 cm ceramic hob
4 high-light zones (with 2 extensible hotplates):
to achieve a fast heat up time
Total power: 6.700 W
9 power levels
Touch controls
Timer

Functions

Heat up function: cooking programme featuring temporary booster

Safety

Child safety lock
Residual heat indicator
Overflow safety device
Automatic stop

Details

Scraper

GTHP65T
Black ceramic glass

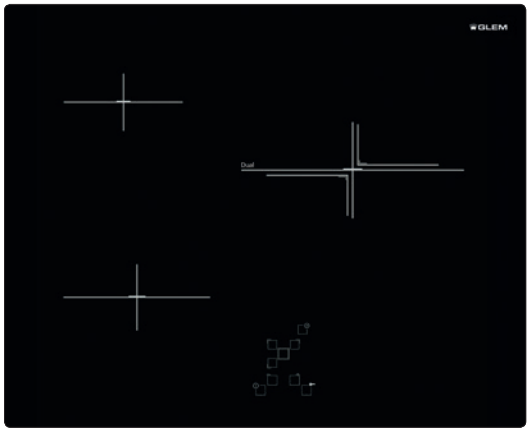

GTHP63T

Performance and features

60 cm ceramic hob
3 high-light zones (with 1 extensible hotplate):
to achieve a fast heat up time
Total power: 5.400 W
9 power levels
Touch controls
Timer

Safety

Child safety lock
Residual heat indicator
Overflow safety device
Automatic stop

Details

Scraper

GTHP63T
Black ceramic glass

GAS HOBS

Contemporaneo

STEEL, GLASS *and* FLAME

GLEM

GVP145HBK

Performance and features

100 cm Crystal gas hob
4 gas burners aligned: to accommodate any size of pots and pans
1 powerful Wok burner: 3.800 W
Total power: 9.550 W

Functions

One-hand electronic ignition

Safety

Flame failure device

Details

4 single cross shaped cast iron pan supports

3800 W

GVP145HBK
Black glass

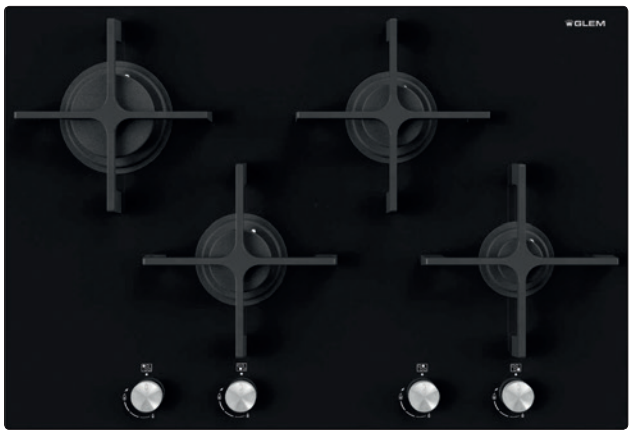

GVP88HBK

Performance and features

75 cm Crystal gas hob
4 gas burners
Total power: 7.500 W

Functions

One-hand electronic ignition

Safety

Flame failure device

Details

4 single cross shaped cast iron pan supports

GVP88HBK
Black glass

GLEM

CRYSTAL GAS HOBS

Contemporaneo

GVP755HBK

Performance and features

75 cm Crystal gas hob
5 gas burners
1 Powerful Wok burner: 3.500 W
Total power: 10.800 W

Functions

One-hand electronic ignition

Safety

Flame failure device

Details

5 single circular cast iron pan supports

3500 W

GVP755HBK
Black glass

GVP755HWH

Performance and features

75 cm Crystal gas hob
5 gas burners
1 Powerful Wok burner: 3.500 W
Total power: 10.800 W

Functions

One-hand electronic ignition

Safety

Flame failure device

Details

5 single circular cast iron pan supports

3500 W

GVP755HWH
White glass

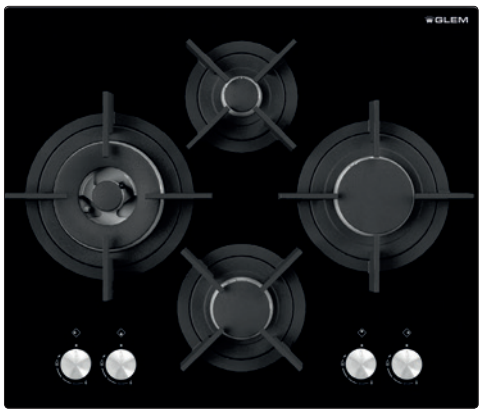

GVP685HBK

Performance and features

60 cm Crystal gas hob
4 gas burners
1 Powerful Wok burner: 3.500 W
Total power: 9.150 W

Functions

One-hand electronic ignition

Safety

Flame failure device

Details

4 single cross shaped cast iron pan supports

3500 W

GVP685HBK
Black glass

GVP685HWH

Performance and features

60 cm Crystal gas hob
4 gas burners
1 Powerful Wok burner: 3.500 W
Total power: 9.150 W

Functions

One-hand electronic ignition

Safety

Flame failure device

Details

4 single cross shaped cast iron pan supports

3500 W

GVP685HWH
White glass

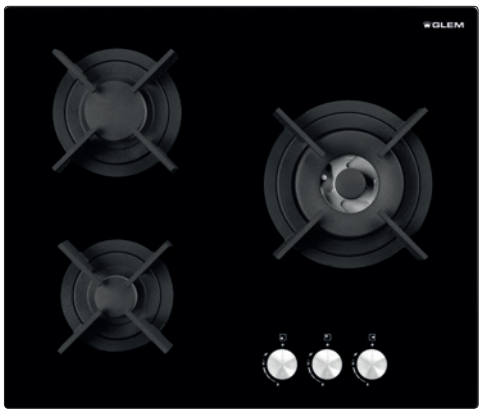

GVP635HBK

Performance and features

60 cm Crystal gas hob
3 gas burners
1 Powerful Wok burner: 3.500 W
Total power: 6.150 W

Functions

One-hand electronic ignition

Safety

Flame failure device

Details

3 single circular cast iron pan supports

3500 W

GVP635HBK
Black glass

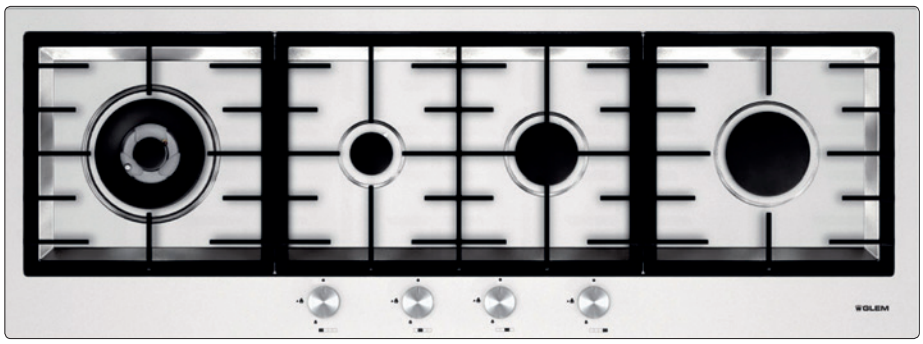

GTPF145HIX

Performance and features

111,5 cm flat gas hob
4 gas burners aligned
1 powerful Wok burner: 4.000 W
Total power: 9.750 W

Functions

One-hand electronic ignition

Safety

Flame failure device

Details

Cast iron pan supports

4000 W

GTPF145HIX
St. steel

GTPF855HIX

Performance and features

75 cm flat gas hob
5 gas burners
1 powerful Wok burner: 3.800 W
Total power: 11.300 W

Functions

One-hand electronic ignition

Safety

Flame failure device

Details

Cast iron pan supports
Dedicated Wok area

3800 W

GTPF855HIX
St. steel

GTPF685HIX

Performance and features

60 cm flat gas hob
4 gas burners
1 powerful Wok burner: 3.500 W
Total power: 8.000 W

Functions

One-hand electronic ignition

Safety

Flame failure device

Details

Cast iron pan supports

3500 W

GTPF685HIX
St. steel

GTPS51HIX

Performance and features

75 cm semi-flush gas hob
5 gas burners
1 Dual Wok burner: 800-4.500 W
Total power: 12.000 W

Functions

One-hand electronic ignition

Safety

Flame failure device

Details

Cast iron pan supports

4500 W

GTPS51HIX
St. steel

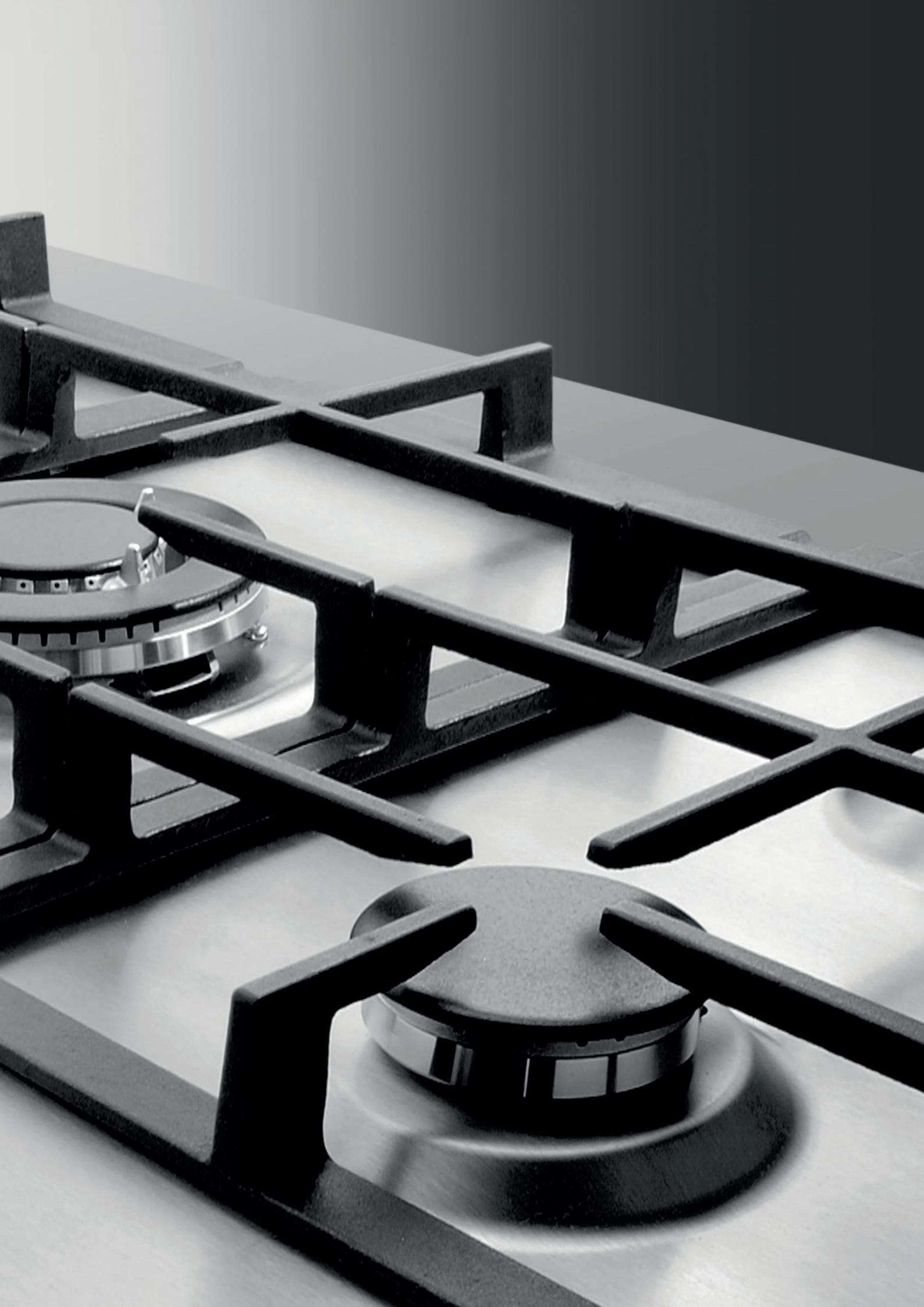

GTP955HIX

Performance and features

90 cm gas hob
5 gas burners
1 powerful Wok burner: 3.800 W
Total power: 11.300 W

Functions

One-hand electronic ignition

Safety

Flame failure device

Details

Cast iron pan supports

3800 W

GTP955HIX
St. steel

GTP951HIX

Performance and features

90 cm gas hob
5 gas burners
1 Dual Wok burner: 800-4.500 W
Total power: 12.000 W

Functions

One-hand electronic ignition

Safety

Flame failure device

Details

Cast iron pan supports
Dedicated Dual Wok area

4500 W

GTP951HIX
St. steel

GTP851HIX

Performance and features

75 cm gas hob
5 gas burners
1 Dual Wok burner: 800-4.500 W
Total power: 12.000 W

Functions

One-hand electronic ignition

Safety

Flame failure device

Details

Cast iron pan supports
Dedicated Dual Wok area

4500 W

GTP851HIX
St. steel

GTP842HIX

Performance and features

75 cm gas hob
4 gas burners
1 Dual Wok burner: 300-4.300 W
1 Wok burner: 3.300 W
Total power: 10.350 W

Functions

One-hand electronic ignition

Safety

Flame failure device

Details

Cast iron pan supports
Dedicated areas for powerful burners

4300 W 3300 W

GTP842HIX
St. steel

GTP64HIX

Performance and features

60 cm gas hob
4 gas burners
Total power: 7.500 W

Functions

One-hand electronic ignition

Safety

Flame failure device

Details

Cast iron pan supports

GTP64HIX
St. steel

GTP685HIX

Performance and features

60 cm gas hob
4 gas burners
1 powerful Wok burner: 3.800 W
Total power: 8.300 W

Functions

One-hand electronic ignition

Safety

Flame failure device

Details

Cast iron pan supports

3800 W

GTP685HIX
St. steel

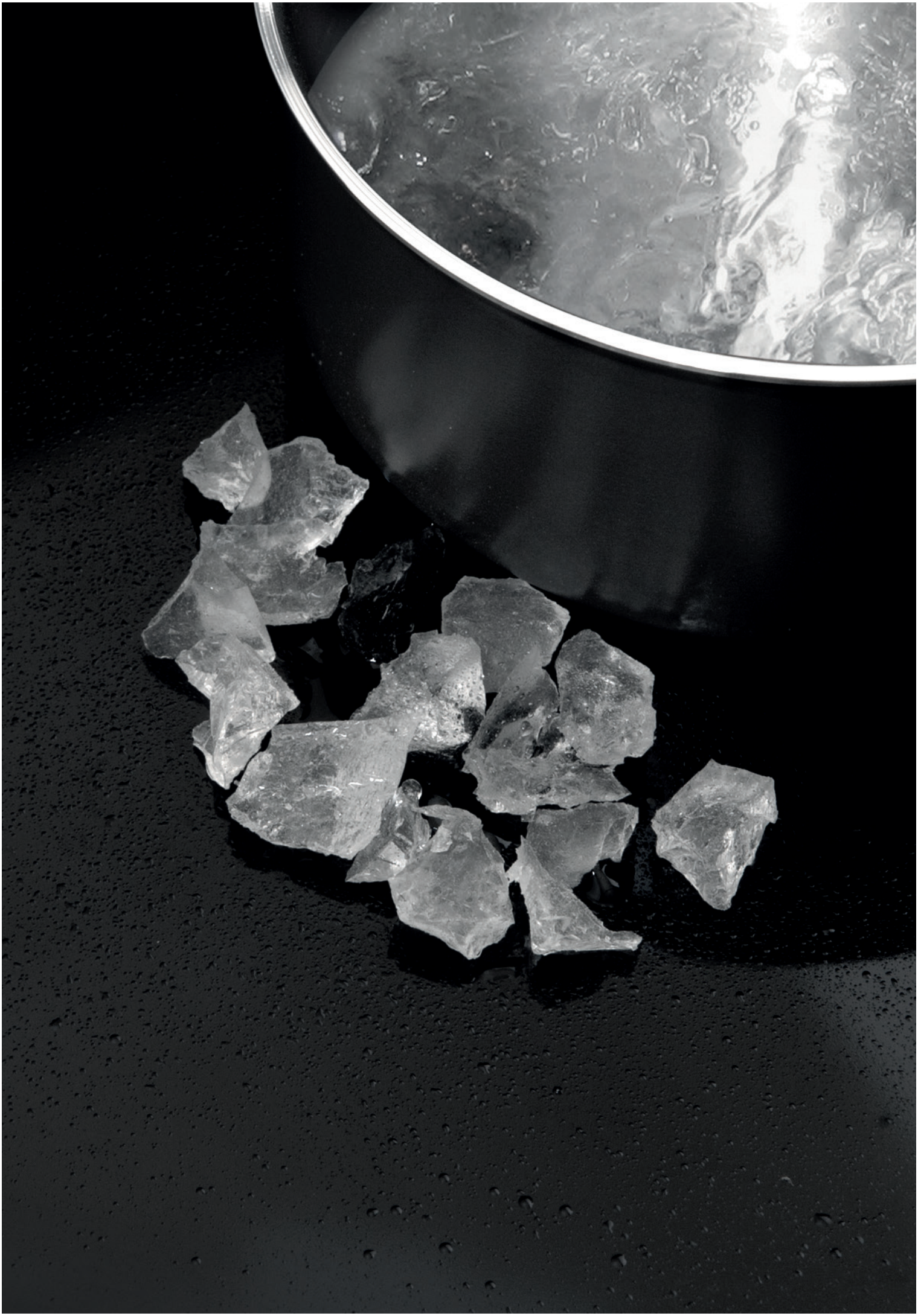

DOMINO HOBS

Contemporaneo

Your TAILOR MADE LAYOUT

INDUCTION
GLEM
INDUCTION

GLEM
INDUCTION
GLEM

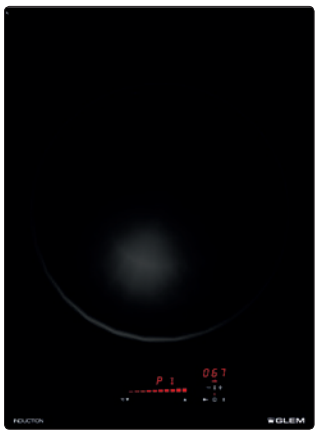

GTIPW41BK

Performance and features

38 cm wide – Wok Domino
1 Powerful Wok burner: 3.000 W
9 power levels
1 slider touch control
Timer

Functions

Booster: to increase the power of any cooking zone by about 75%
3 automatic temperatures
Heat up function: cooking programme featuring temporary booster

Safety

Child safety lock
Residual heat indicator
Overflow safety device
Pot diameter detector

GTIPW41BK
Black ceramic glass

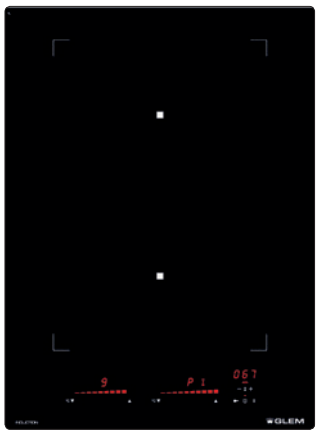

GTIP42BK

Performance and features

38 cm wide – Induction Domino
2 zones
Total power: 3.700 W
9 power levels
2 sliders touch controls
Timer

Functions

Booster: to increase the power of any cooking zone by about 75%
3 automatic temperatures
Heat up function: cooking programme featuring temporary booster
Bridge function: allows two heating zones to be controlled and treated as one

Safety

Child safety lock
Residual heat indicator
Overflow safety device
Pot diameter detector

GTIP42BK
Black ceramic glass

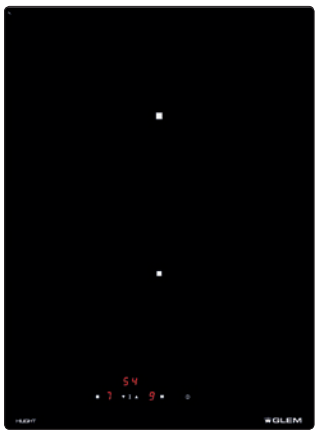

GTHP42BK

Performance and features

38 cm wide – Ceramic Domino
2 high-light zones: to achieve a fast heat up time
Total power: 3.000 W
9 power levels
Digital controls
Digital clock
2 Timers (1 for the egg cooking)

Functions

Automatic cooking
Booster: to increase the power of any cooking zone by about 75%

Safety

Child safety lock
Residual heat indicator
Over temperature cut-off
Overflow safety device
Automatic stop

GTHP42BK
Black ceramic glass

GTPN42BK

Performance and features

38 cm Teppanyaki induction Domino
2 independent thermostatically controlled cooking areas
Total power: 2.800 W
9 power levels
Slider touch controls
2 timers (1 for egg cooking)
Digital clock

Functions

Temperature regulator between 50° and 220°
Memory
Bridge function: allows two heating zones to be controlled and treated as one

Safety

Child safety lock
Residual heat indicator
Overflow safety device
Over temperature cut-off
Automatic stop

Details

Full glass control panel

GTPN42BK
St. steel grill plate - Black ceramic glass

GLEM

GLEM
GLEM

GVP415HBK

Performance and features

38 cm wide – High power Ceramic Domino
1 Powerful Wok: 5.000 W

Functions

One-hand electronic ignition

Safety

Flame failure device

Details

Single round cast iron pan support
Wok support

38 cm

5000 W

GVP415HBK
Black ceramic glass

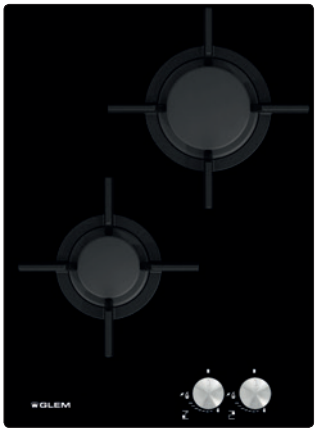

GVP42HBK

Performance and features

38 cm wide – Ceramic Domino
2 gas burners
Total power: 4.000 W

Functions

One-hand electronic ignition

Safety

Flame failure device

Details

2 Single round cast iron pan supports
Wok support

38 cm

GVP42HBK
Black ceramic glass

GT415HIX

Performance and features

37 cm wide – Domino gas
1 Powerful Wok: 3.800 W

Functions

One-hand electronic ignition

Safety

Flame failure device

Details

Cast iron pan support

37 cm | 50 cm | 3800 W

GT415HIX
St. steel

GT425HIX

Performance and features

37 cm wide – Domino gas
2 gas burners
Total power: 4.000 W

Functions

One-hand electronic ignition

Safety

Flame failure device

Details

Cast iron pan support

37 cm | 50 cm

GT425HIX
St. steel

VOLDA

HOODS

Contemporaneo

AIR, SPACE *and* LIGHT

FOLEN

GLEM

50 cm

ISLAND STARLIGHT HOOD
GHIL55IX

Performance and features

Ø 51,5 cm wide
Electronic controls
3 speed
Aluminium grease filters
Carbon filters
Maximum extraction rate 540 m^3/h

Functions

Booster: 10' at full power to clean the environment
Delay timer: to set the automatically cut off
Clean Air: to switch on the hood a few minutes per hour to renew the air in your kitchen

Safety

Filter saturation alarm

Details

Perimetral suction

CLEANAIR

GHIL55IX
St. steel

50 cm

ISLAND CUBO HOOD
GHIK58WH

Performance and features

Ø 50 cm wide
Electronic controls
Led lights
4 speed
Aluminium grease filters
Carbon filter
Maximum extraction rate 576,5 m^3/h

Functions

Booster: 10' at full power to clean the environment

Details

Perimetral suction

LED

GHIK58WH
White painted + st. steel box

80 cm

ISLAND APPLE HOOD
GHIA85IX

Performance and features

80,4 cm wide
Electronic controls push buttons
4 speed
Grease filter (St. steel with aluminium pad)
Carbon filters
Maximum extraction rate 496 m^3/h

Functions

Booster: 10’ at full power to clean the environment

LED

GHIA85IX
Satinated white glass + st. steel lateral sides

67 cm

WALL HOOD
GHWK68WH

Performance and features

67 cm wide
Electronic controls with display
4 speed
Led lights
Aluminium grease filters
Carbon filter
Maximum extraction rate 802 m^3/h

Functions

Booster: 10’ at full power to clean the environment

Details

Perimetral suction

LED

GHWK68WH
White glass + st. steel

80 cm

WALL CRYSTAL HOOD
GHGP89BK

Performance and features

80 cm wide
Touch backlit controls
4 speed
Aluminium grease filters
Carbon filters
Maximum extraction rate 920 m^3/h
Led lights

Functions

Booster: 10’ at full power to clean the environment
Delay timer: to set the automatically cut off
Clean Air: to switch on the hood a few minutes per hour to renew the air in your kitchen

Safety

Filter saturation alarm

Details

Perimetral suction

GHGP89BK
Black glass

80 cm

WALL CRYSTAL HOOD
GHGP89WH

Performance and features

80 cm wide
Touch backlit controls
4 speed
Aluminium grease filters
Carbon filters
Maximum extraction rate 920 m^3/h
Led lights

Functions

Booster: 10’ at full power to clean the environment
Delay timer: to set the automatically cut off
Clean Air: to switch on the hood a few minutes per hour to renew the air in your kitchen

Safety

Filter saturation alarm

Details

Perimetral suction

GHGP89WH
White glass

90 cm

DOWNDRAFT HOOD
GHVP98BK

Performance and features

90 cm wide
Touch controls
4 speed
Aluminium grease filters
Carbon filter
Maximum extraction rate 850 m^3/h

Functions

Delay timer: to set the automatically cut off

Safety

Filter saturation alarm

Details

Perimetral suction
Black glass

GHVP98BK
St. steel - black glass

60 cm

DOWNDRAFT HOOD
GHVP68BK

Performance and features

60 cm wide
Touch controls
4 speed
Aluminium grease filters
Carbon filter
Maximum extraction rate 850 m^3/h

Functions

Delay timer: to set the automatically cut off

Safety

Filter saturation alarm

Details

Perimetral suction
Black glass

GHVP68BK
St. steel - black glass

37 cm

ISLAND CYLINDER HOOD
GHIP48IX

Performance and features

Ø 37 cm wide
Feel touch controls (optical)
3 speed
Aluminium grease filter
Carbon filter
Maximum extraction rate 650 m^3/h

Functions

Booster: 10’ at full power to clean the environment
Delay timer: to set the automatically cut off
Clean Air: to switch on the hood a few minutes per hour to renew the air in your kitchen

Safety

Filter saturation alarm

Details

Perimetral suction

CLEANAIR

GHIP48IX
St. steel

60 cm

ISLAND CUBE HOOD
GHIP68IX

Performance and features

60 cm wide
Feel touch controls (optical)
3 speed
Aluminium grease filter
Carbon filter
Maximum extraction rate 700 m^3/h

Functions

Booster: 10’ at full power to clean the environment

Safety

Filter saturation alarm

Details

Perimetral suction

GHIP68IX
St. steel

90 cm

CEILING HOOD
GHIS98IX / GHIS128IX

Performance and features

90 cm wide / 120 cm wide
Electronic controls
3 speed
1 Led bar
Aluminium grease filters
Carbon filters
Maximum extraction rate: 790 m^3/h

Functions

Booster: 10’ at full power to clean the environment
Delay timer: to set the automatically cut off
Clean Air: to switch on the hood a few minutes per hour to renew the air in your kitchen

Safety

Filter saturation alarm

Details

Perimetral suction

GHIS98IX / GHIS128IX
St. steel

90 cm

GHBP98IX

Performance and features

90 cm wide
Touch controls backlit
3 speed
Aluminium grease filters
Maximum extraction rate: 820 m^3/h

Functions

Booster: 10’ at full power to clean the environment

GHBP98IX
St. steel - black glass

67 cm

GHFP77IX / GHFP57IX

Performance and features

70 cm wide / 52 cm wide
Electronic controls
3 speed
Aluminium grease filters
Carbon filters
Maximum extraction rate: 690 m^3/h

Functions

Booster: 10’ at full power to clean the environment

Safety

Filter saturation alarm

Details

Perimetral suction

GHFP77IX / GHFP57IX
St. steel

WARM ATMOSP

Tradizione

PHERE

OVENS

Tradizione

GLEM
Kitchen Design
Gardens in France
BORDEAUX

GFN94AV

Performance and features

Multifunction oven
Analogic clock (start/end cooking)
64 l oven capacity
Tangential cooling fan
2 shelves positions with telescopic grids
Easy to clean enamelled cavity

Functions

9 functions

Safety

Triple glass cold door

Details

Titanium enamelled cavity
Full flat glass inner door

GFN94AV
Avena

GFN94RM

Performance and features

Multifunction oven
Analogic clock (start/end cooking)
64 l oven capacity
Tangential cooling fan
2 shelves positions with telescopic grids
Easy to clean enamelled cavity

Functions

9 functions

Safety

Triple glass cold door

Details

Titanium enamelled cavity
Full flat glass inner door

GFN94RM
Copper

GFN94AN

Performance and features

Multifunction oven
Analogic clock (start/end cooking)
64 l oven capacity
Tangential cooling fan
2 shelves positions with telescopic grids
Easy to clean enamelled cavity

Functions

9 functions

Safety

Triple glass cold door

Details

Titanium enamelled cavity
Full flat glass inner door

GFN94AN
Anthracite

GFN94TF

Performance and features

Multifunction oven
Analogic clock (start/end cooking)
64 l oven capacity
Tangential cooling fan
2 shelves positions with telescopic grids
Easy to clean enamelled cavity

Functions

9 functions

Safety

Triple glass cold door

Details

Titanium enamelled cavity
Full flat glass inner door

GFN94TF
Terre de France

GFN94BA

Performance and features

Multifunction oven
Analogic clock (start/end cooking)
64 l oven capacity
Tangential cooling fan
2 shelves positions with telescopic grids
Easy to clean enamelled cavity

Functions

9 functions

Safety

Triple glass cold door

Details

Titanium enamelled cavity
Full flat glass inner door

GFN94BA
White

GFN94PN

Performance and features

Multifunction oven
Analogic clock (start/end cooking)
64 l oven capacity
Tangential cooling fan
2 shelves positions with telescopic grids
Easy to clean enamelled cavity

Functions

9 functions

Safety

Triple glass cold door

Details

Titanium enamelled cavity
Full flat glass inner door

GFN94PN
Cream

GLEM
Gardens in France

MAKING IT

GFN54AV

Performance and features

Multifunction oven
Analogic clock (start/end cooking)
64 l oven capacity
Tangential cooling fan
Smooth sides with chromed racks
Easy to clean enamelled cavity

Functions

5 functions

Safety

Triple glass cold door

Details

Titanium enamelled cavity
Full flat glass inner door

GFN54AV
Avena

GFN54RM

Performance and features

Multifunction oven
Analogic clock (start/end cooking)
64 l oven capacity
Tangential cooling fan
Smooth sides with chromed racks
Easy to clean enamelled cavity

Functions

5 functions

Safety

Triple glass cold door

Details

Titanium enamelled cavity
Full flat glass inner door

GFN54RM
Copper

GFN54AN

Performance and features

Multifunction oven
Analogic clock (start/end cooking)
64 l oven capacity
Tangential cooling fan
Smooth sides with chromed racks
Easy to clean enamelled cavity

Functions

5 functions

Safety

Triple glass cold door

Details

Titanium enamelled cavity
Full flat glass inner door

GFN54AN
Anthracite

GFN54TF

Performance and features

Multifunction oven
Analogic clock (start/end cooking)
64 l oven capacity
Tangential cooling fan
Smooth sides with chromed racks
Easy to clean enamelled cavity

Functions

5 functions

Safety

Triple glass cold door

Details

Titanium enamelled cavity
Full flat glass inner door

GFN54TF
Terre de France

GFN54BA

Performance and features

Multifunction oven
Analogic clock (start/end cooking)
64 l oven capacity
Tangential cooling fan
Smooth sides with chromed racks
Easy to clean enamelled cavity

Functions

5 functions

Safety

Triple glass cold door

Details

Titanium enamelled cavity
Full flat glass inner door

GFN54BA
White

GFN54PN

Performance and features

Multifunction oven
Analogic clock (start/end cooking)
64 l oven capacity
Tangential cooling fan
Smooth sides with chromed racks
Easy to clean enamelled cavity

Functions

5 functions

Safety

Triple glass cold door

Details

Titanium enamelled cavity
Full flat glass inner door

GFN54PN
Cream

GFNV25AV

Performance and features

MULTICHEF
Multifunction gas oven (fan assisted)
Electrical grill
Analogic minute minder
63 l oven capacity
Tangential cooling fan
Smooth sides with chromed racks
Easy to clean enamelled cavity

Functions

6 functions

Safety

Triple glass cold door

Details

Titanium enamelled cavity
Full flat glass inner door

GFNV25AV
Avena

GFNV25TF

Performance and features

MULTICHEF
Multifunction gas oven (fan assisted)
Electrical grill
Analogic minute minder
63 l oven capacity
Tangential cooling fan
Smooth sides with chromed racks
Easy to clean enamelled cavity

Functions

6 functions

Safety

Triple glass cold door

Details

Titanium enamelled cavity
Full flat glass inner door

GFNV25TF
Terre de France

GLEM
Kitchen Design
Gardens in France
BORDEAUX

HOBS

Tradizione

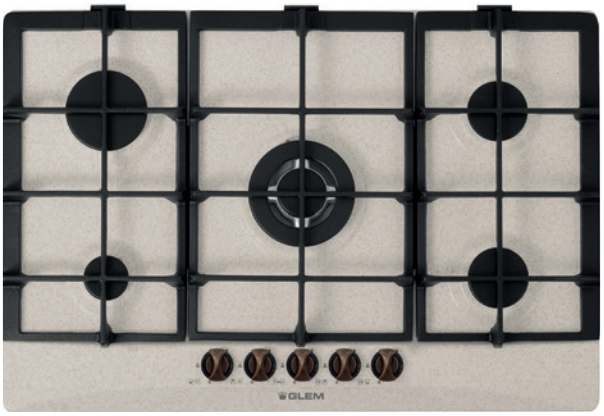

GTPR855HAV

Performance and features

75 cm gas hob
5 gas burners
1 powerful Wok burner: 3300 W
Total power: 10.800 W

Functions

One-hand electronic ignition

Safety

Flame failure device

Details

Cast iron pan supports

GTPR855HAV
Avena

GTPR855HRM

Performance and features

75 cm gas hob
5 gas burners
1 powerful Wok burner: 3.300 W
Total power: 10.800 W

Functions

One-hand electronic ignition

Safety

Flame failure device

Details

Cast iron pan supports

GTPR855HRM
Copper

GTPR855HAN

Performance and features

75 cm gas hob
5 gas burners
1 powerful Wok burner: 3300 W
Total power: 10800 W

Functions

One-hand electronic ignition

Safety

Flame failure device

Details

Cast iron pan supports

GTPR855HAN
Anthracite

GTPR855HTF

Performance and features

75 cm gas hob
5 gas burners
1 powerful Wok burner: 3300 W
Total power: 10800 W

Functions

One-hand electronic ignition

Safety

Flame failure device

Details

Cast iron pan supports

GTPR855HTF
Terre de France

GTPR855HBA

Performance and features

75 cm gas hob
5 gas burners
1 powerful Wok burner: 3.300 W
Total power: 10.800 W

Functions

One-hand electronic ignition

Safety

Flame failure device

Details

Cast iron pan supports

GTPR855HBA
White

GTPR855HPN

Performance and features

75 cm gas hob
5 gas burners
1 powerful Wok burner: 3.300 W
Total power: 10.800 W

Functions

One-hand electronic ignition

Safety

Flame failure device

Details

Cast iron pan supports

GTPR855HPN
Cream

GLEM

GTPR645HAV

Performance and features

60 cm gas hob
4 gas burners
1 powerful Wok burner: 3.300 W
Total power: 7.800 W

Functions

One-hand electronic ignition

Safety

Flame failure device

Details

Cast iron pan supports

GTPR645HAV
Avena

GTPR645HRM

Performance and features

60 cm gas hob
4 gas burners
1 powerful Wok burner: 3.300 W
Total power: 7.800 W

Functions

One-hand electronic ignition

Safety

Flame failure device

Details

Cast iron pan supports

GTPR645HRM
Copper

GTPR645HAN

Performance and features

60 cm gas hob
4 gas burners
1 powerful Wok burner: 3.300 W
Total power: 7.800 W

Functions

One-hand electronic ignition

Safety

Flame failure device

Details

Cast iron pan supports

GTPR645HAN
Anthracite

GTPR645HTF

Performance and features

60 cm gas hob
4 gas burners
1 powerful Wok burner: 3.300 W
Total power: 7.800 W

Functions

One-hand electronic ignition

Safety

Flame failure device

Details

Cast iron pan supports

GTPR645HTF
Terre de France

GTPR645HBA

Performance and features

60 cm gas hob
4 gas burners
1 powerful Wok burner: 3.300 W
Total power: 7.800 W

Functions

One-hand electronic ignition

Safety

Flame failure device

Details

Cast iron pan supports

GTPR645HBA
White

GTPR645HPN

Performance and features

60 cm gas hob
4 gas burners
1 powerful Wok burner: 3.300 W
Total power: 7.800 W

Functions

One-hand electronic ignition

Safety

Flame failure device

Details

Cast iron pan supports

GTPR645HPN
Cream

HOODS

Tradizione

GHPR94AV

Performance and features

90/60 cm wide
Slider controls
3 speed
Aluminium grease filters
Carbon filters
Maximum extraction rate: 395 m³/h

GHPR94AV 90 cm
GHPR64AV 60 cm
Avena

GHPR94RM

Performance and features

90/60 cm wide
Slider controls
3 speed
Aluminium grease filters
Carbon filters
Maximum extraction rate: 395 m³/h

GHPR94RM 90 cm
GHPR64RM 60 cm
Copper

GHPR94AN

Performance and features

90/60 cm wide
Slider controls
3 speed
Aluminium grease filters
Carbon filters
Maximum extraction rate: 395 m³/h

GHPR94AN 90 cm
GHPR64AN 60 cm
Anthracite

GHPR94TF

Performance and features

90/60 cm wide
Slider controls
3 speed
Aluminium grease filters
Carbon filters
Maximum extraction rate: 395 m³/h

GHPR94TF 90 cm
GHPR64TF 60 cm
Terre de France

GHPR94BA

Performance and features

90/60 cm wide
Slider controls
3 speed
Aluminium grease filters
Carbon filters
Maximum extraction rate: 395 m^3/h

GHPR94BA 90 cm
GHPR64BA 60 cm
White

GHPR94PN

Performance and features

90/60 cm wide
Slider controls
3 speed
Aluminium grease filters
Carbon filters
Maximum extraction rate: 395 m^3/h

GHPR94PN 90 cm
GHPR64PN 60 cm
Cream

TECH INFO

GFP16 - GFP13 - GFP93 - GFP93L - GFPW21 - GFPV21 - GFS93 - GFS53 - GFN94 - GFN54

OVENS

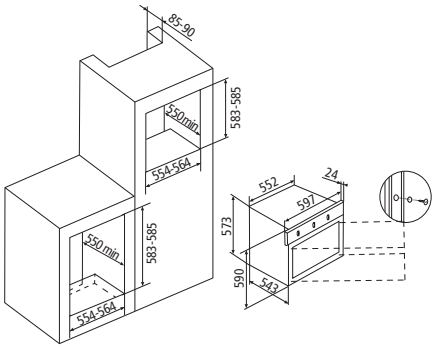

GFNV25

OVENS

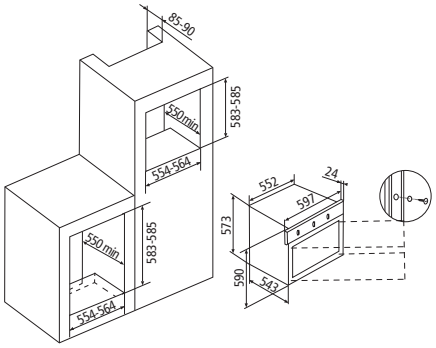

GFP993IX

OVENS

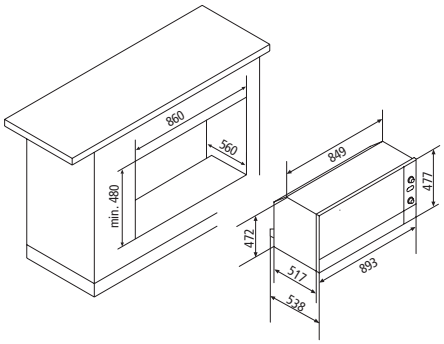

GFCWDIX

WARMING DRAWERS OVENS

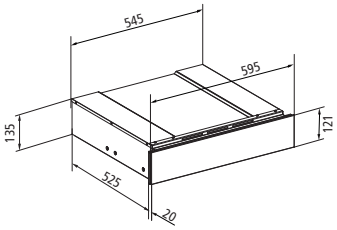

GFCS16

COMPACT OVEN

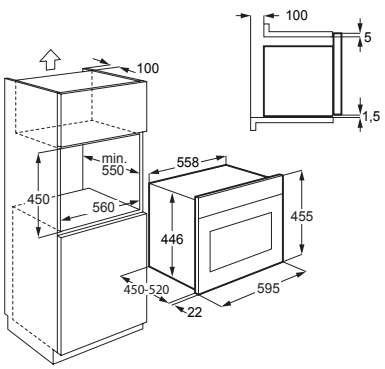

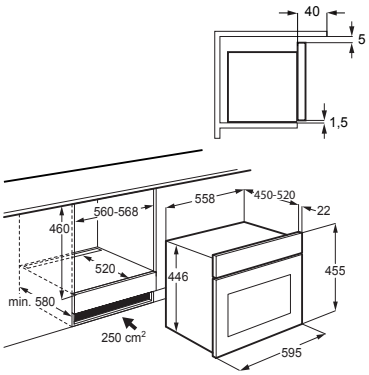

GTIP14

HOBS

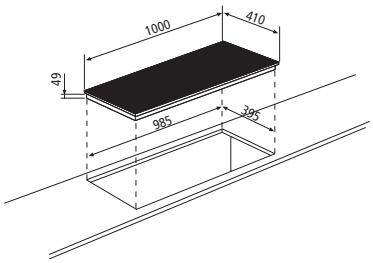

GTP955H

HOBS

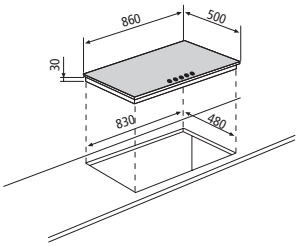

GTIP83

HOBS

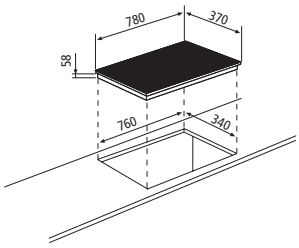

GTIP84

HOBS

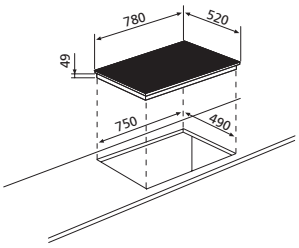

GTIPW84

HOBS

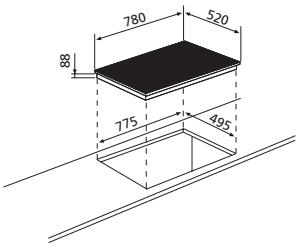

GTIP64 - GTIP63 - GTHP85T - GTHP65T - GTHP63T

HOBS

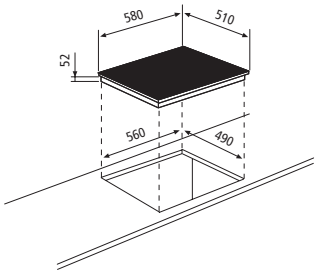

GTPF145H

HOBS

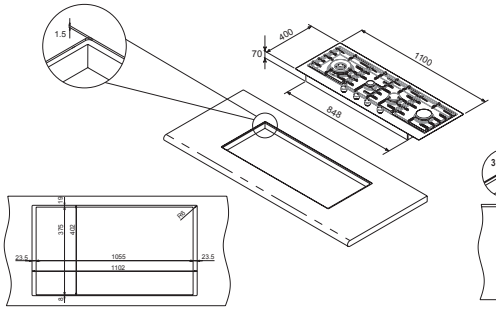

GTPF855H

HOBS

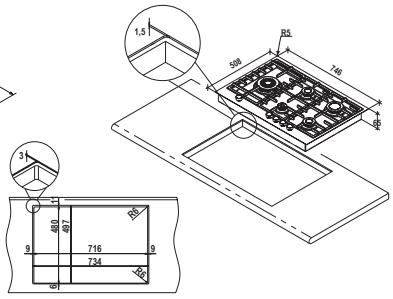

GTPF685H

HOBS

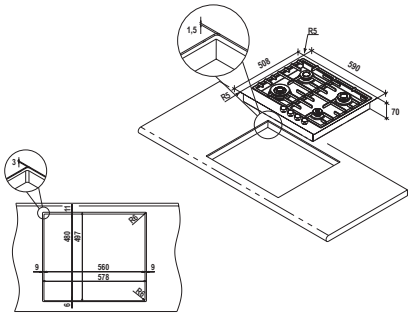

GTPS51H

HOBS

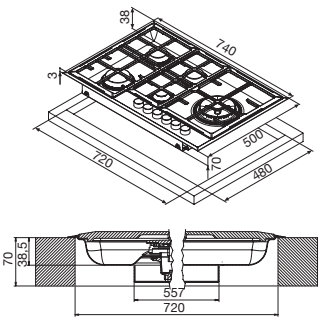

GTP951H

HOBS

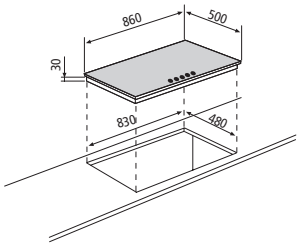

GTP851H - GTP842H

HOBS

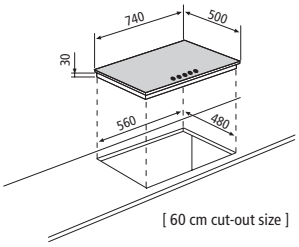

[60 cm cut-out size]

GTP64H - GTP685H

HOBS

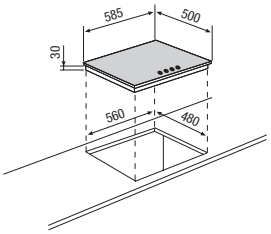

GTPR855H

HOBS

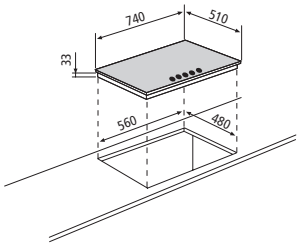

GTPR645H

HOBS

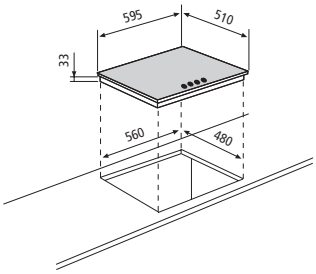

GVP145H

HOBS

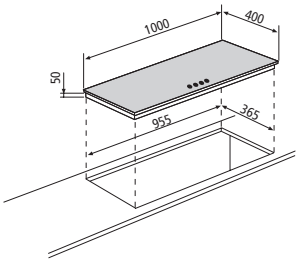

GVP88H

HOBS

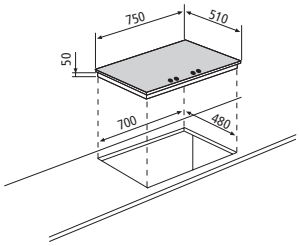

GVP755H

HOBS

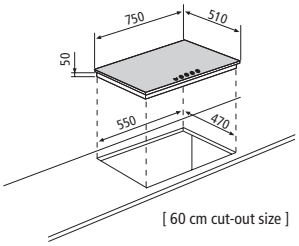

[60 cm cut-out size]

GVP685H - GVP635H

HOBS

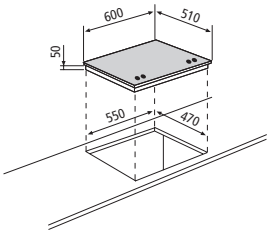

GTIPW41

HOBS

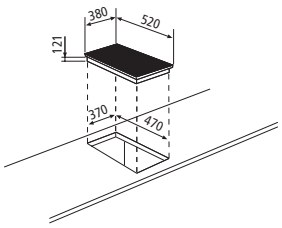

GTPN42

HOBS

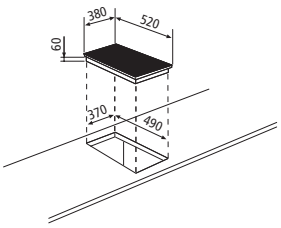

GTIP42

HOBS

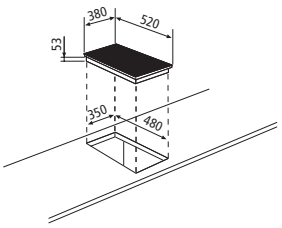

GTHP42

HOBS

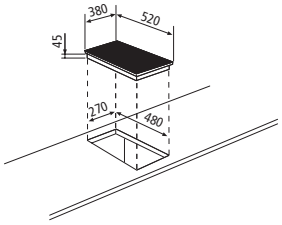

GT415H - GT425H

HOBS

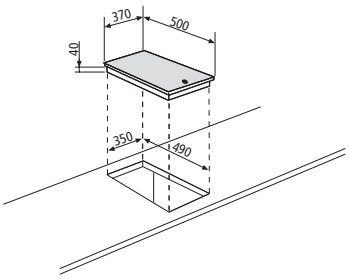

GVP415H - GVP42H

HOBS

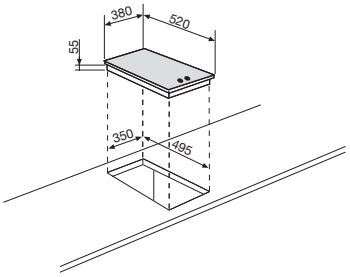

GHIL55

HOODS

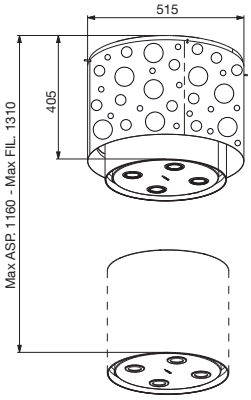

GHIK58

HOODS

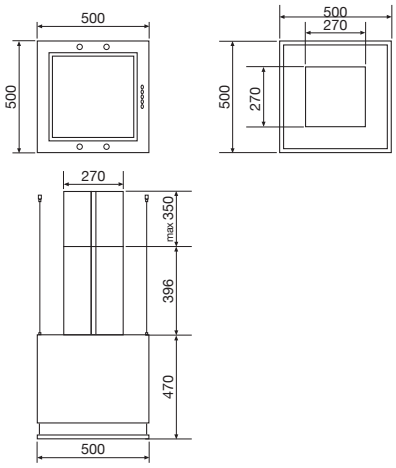

GHIA85

HOODS

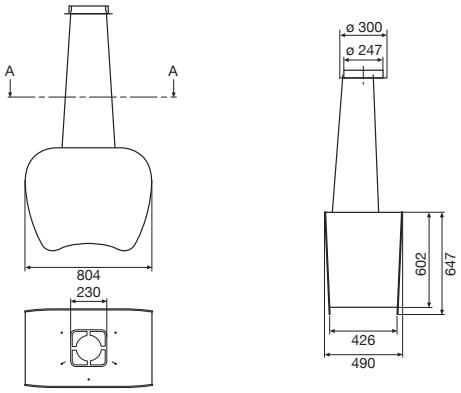

GHWK68

HOODS

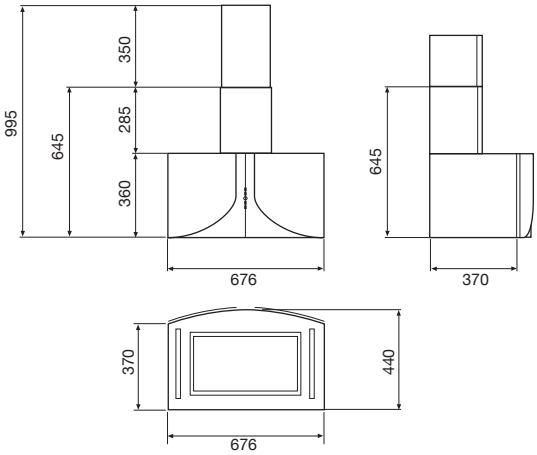

GHGP89

HOODS

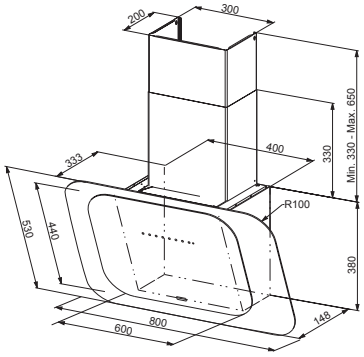

GHVP98

HOODS

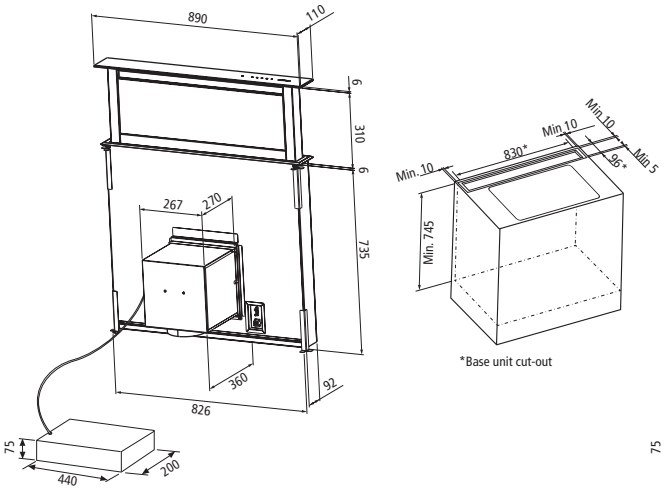

GHVP68

HOODS

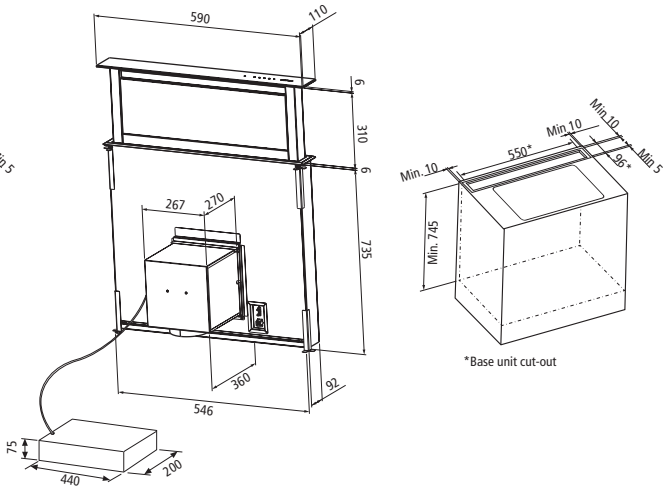

GHIP48

HOODS

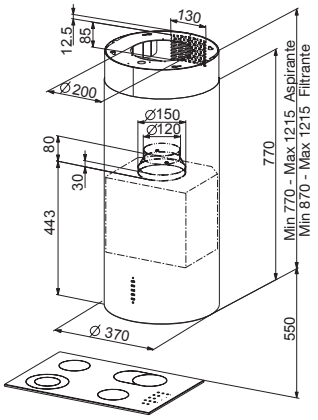

GHIP68

HOODS

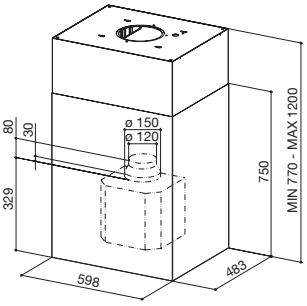

GHIS98

HOODS

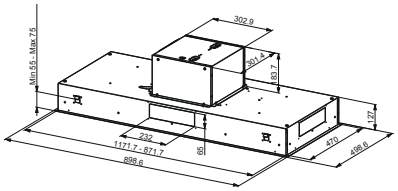

GHBP98

HOODS

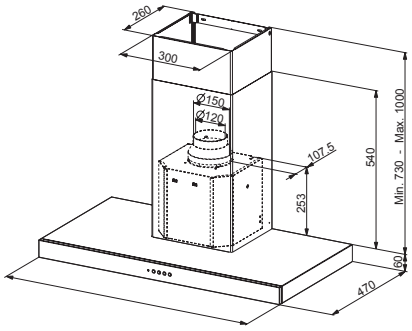

GHFP77

HOODS

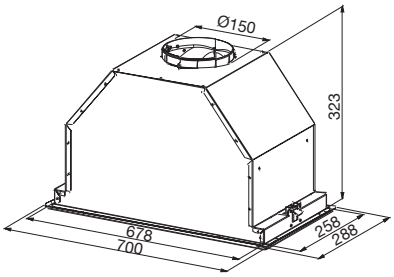

GHPR94 - GHPR64

HOODS

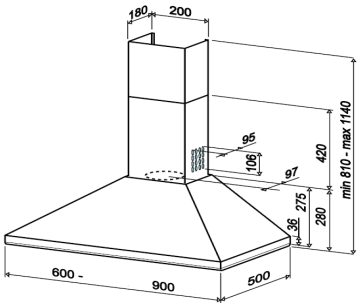

FUNCTIONS

Tech info

OVEN LIGHT
It is operated utilizing the oven functions.

GRILL
It is used to cook “au gratin”.
Ideal for cooking “thin” meat.

MULTIFUNCTION (CIRCULAR + FAN)
The fan moves the hot air inside the oven, allowing homogeneous cooking on 3 levels, without spreading any smell.

PIZZA
Ideal for cooking pizza.

GRILL WITH FAN
The grill along with the fan spreads the heat in a homogenous way. It is ideal for cooking medium and very thick meat.

DEFROSTING
The fan is operated without any element. It assures rapid defrosting in few minutes and in the best possible way.

PRE-HEATING
This time-saver preheats the oven approx. 30% faster by using all the heating elements at once.

GRILL + TURNSPIT
Ideal for grilling.

LOW TEMP
The fan together with the preset temperature at 40 °C is ideal to defrost in low temperature or manteinig hot cooked dishes.

TRADITIONAL COOKING
The heat is given by the bottom and upper oven elements. Ideal for pastry cooking and traditional recipes.

GRILL WITH FAN + TURNSPIT
The grill along with the fan spreads the heat in a homogeneous way.
It is ideal for cooking and grilling medium and very thick meat.

TURNSPIT
Ideal for baking meats.

BOTTOM ELEMENT
Ideal for cooking pies and to give a final touch to the cooking.

DOUBLE GRILL
The grill along with the upper element allows grilling on wider areas.

GAS
Traditional gas cooking.

BOTTOM ELEMENT WITH FAN
The heat of the bottom element is spread through the fan. Ideal for soufflés.

GRILL GAS
Ideal for cooking with turnspit.

GRILL GAS + TURNSPIT
Ideal for baking meats.

UPPER ELEMENT
This function allows direct cooking.
Very good for cooking au gratin.

DOUBLE GRILL WITH FAN
Ideal for grilling meat and for cooking fish.

GAS + TURNSPIT
Ideal for even cooking.

STATIC + FAN
The heat given by the bottom and upper oven elements is spread through the fan.

DOUBLE GRILL + TURNSPIT
Ideal for grilling big pieces of meat.

GAS WITH FAN
The fan spreads the heat produced by the gas burner in a homogeneous way.

UPPER ELEMENT + FAN
This function allows direct cooking.
Very good for cooking big pieces of meat.

DOUBLE GRILL + FAN + TURNSPIT
Ideal for grilling big pieces of meat, with turspit.

AMBIENTE LIGHT
It makes a special atmosphere in the kitchen.

		GFP16IX	GFP13IX	GFP13WH
Collection		Contemporaneo	Contemporaneo	Contemporaneo
Type		Multifunction	Multifunction	Multifunction
Colour		Black / St.steel frame	Black / St.steel frame	White / St.steel frame
FUNCTIONS				
Programs number		13	11	11
Light		-	-	-
Pizza		•	•	•
Pre-heating		-	•	•
Traditional cooking		•	•	•
Bottom element		-	•	•
Bottom element + fan		•	•	•
Upper element		•	-	-
Grill		•	•	•
Grill + upper element (double grill)		•	-	-
Double grill + fan		•	•	•
Double grill + turnspit		-	-	-
Double grill + fan + turnspit		-	-	-
Grill + fan		•	-	-
Grill + turnspit		-	-	-
Grill + fan + turnspit		-	-	-
Static + fan		•	•	•
Multifunction (circular + fan)		•	•	•
Defrosting		•	•	•
Turnspit		-	-	-
Gas		-	-	-
Grill Gas		-	-	-
Grill Gas + turnspit		-	-	-
Gas + fan		-	-	-
Gas + turnspit		-	-	-
Upper element + fan		•	-	-
Low temp		•	•	•
Ambiente Light		-	-	-
PROGRAMMING				
Clock-Oven Control System		Full touch electronic programmer	Full electronic programmer	Full electronic programmer
OVEN CAVITY				
Black enamel		-	-	-
Titanium grey (ETC)		•	•	•
Bronzed Enamel		-	-	-
Glass Door Type		Full glass flat	Full glass flat	Full glass flat
Cold door		•	•	•
OVEN CAVITY EQUIPMENT				
Smooth sides with chromed racks		•	•	•
n° grids		1	1	1
n° driptray		2	2	2
Other accessories		-	-	-
Turnspit		-	-	-
n° level with telescopic guide		2	2	2
TECHNICAL FEATURES				
Power	kW	2,870	2,870	2,870
Voltage/Frequency	V/Hz	220-240 / 50-60	220-240 / 50-60	220-240 / 50-60
Efficiency energy class [1]		A	A	A
Net volume	lt	64	64	64
n° glass		3	3	3
n° lamps		1	1	1
Tangential cooling fan		•	•	•
Energy consumption conventional [1]	kWh	0,88	0,88	0,88
Energy consumption fan forced [1]	kWh	0,80	0,80	0,80
Maximum temperature	°C	250	250	250
DIMENSIONS				
Product HxWxD	mm	590x597x543	590x597x543	590x597x543
Built-in HxWxD	mm	583x554x564	583x554x564	583x554x564
Package HxWxD	mm	700x640x640	700x640x640	700x640x640

[1] from January 2015, according to regulation 65/2014

TECHNICAL FEATURES OVENS

		GFP93IX	GFP93IXL	GFP93BK
Collection		Contemporaneo	Contemporaneo	Contemporaneo
Type		Multifunction	Multifunction	Multifunction
Colour		Black / St.steel frame	St.steel / St.steel frame	Black
FUNCTIONS				
Programs number		9	9	9
Light		-	-	-
Pizza		•	•	•
Pre-heating		•	•	•
Traditional cooking		•	•	•
Bottom element		-	-	-
Bottom element + fan		-	-	-
Upper element		-	-	-
Grill		•	•	•
Grill + upper element (double grill)		•	•	•
Double grill + fan		•	•	•
Double grill + turnspit		-	-	-
Double grill + fan + turnspit		-	-	-
Grill + fan		-	-	-
Grill + turnspit		-	-	-
Grill + fan + turnspit		-	-	-
Static + fan		•	•	•
Multifunction (circular + fan)		•	•	•
Defrosting		•	•	•
Turnspit		-	-	-
Gas		-	-	-
Grill Gas		-	-	-
Grill Gas + turnspit		-	-	-
Gas + fan		-	-	-
Gas + turnspit		-	-	-
Upper element + fan		-	-	-
Low temp		-	-	-
Ambiente Light		-	-	-
PROGRAMMING				
Clock-Oven Control System		Digital programmer touch	Electronic programmer touch	Electronic programmer touch
OVEN CAVITY				
Black enamel		-	-	-
Titanium grey (ETC)		•	•	•
Bronzed Enamel		-	-	-
Glass Door Type		Full glass flat	Full glass flat	Full glass flat
Cold door		•	•	•
OVEN CAVITY EQUIPMENT				
Smooth sides with chromed racks		•	•	•
n° grids		1	1	1
n° driptray		2	2	2
Other accessories		-	-	-
Turnspit		-	-	-
n° level with telescopic guide		2	2	2
TECHNICAL FEATURES				
Power	kW	2,670	2,870	2,870
Voltage/Frequency	V/Hz	220-240 / 50-60	220-240 / 50-60	220-240 / 50-60
Efficiency energy class [1]		A	A	A
Net volume	lt	64	64	64
n° glass		3	3	3
n° lamps		1	1	1
Tangential cooling fan		•	•	•
Energy consumption conventional [1]	kWh	0,88	0,88	0,88
Energy consumption fan forced [1]	kWh	0,80	0,80	0,80
Maximum temperature	°C	250	250	250
DIMENSIONS				
Product HxWxD	mm	590x597x543	590x597x543	590x597x543
Built-in HxWxD	mm	583x554x564	583x554x564	583x554x564
Package HxWxD	mm	700x640x640	700x640x640	700x640x640

[1] from January 2015, according to regulation 65/2014

		GFP93WH	GFPW21IX	GFPV21IX	GFS93IX
Collection		Contemporaneo	Contemporaneo	Contemporaneo	Contemporaneo
Type		Multifunction	Gas Multifunction	Gas Multifunction (electric glill)	Multifunction
Colour		White	St.steel / St. steel frame	St.steel / St. steel frame	St. steel
FUNCTIONS					
Programs number		9	3	6	9
Light		-	•	•	-
Pizza		•	-	-	•
Pre-heating		•	-	-	•
Traditional cooking		•	-	-	•
Bottom element		-	-	-	-
Bottom element + fan		-	-	-	-
Upper element		-	-	-	-
Grill		•	-	•	•
Grill + upper element (double grill)		•	-	-	•
Double grill + fan		•	-	-	•
Double grill + turnspit		-	-	-	-
Double grill + fan + turnspit		-	-	-	-
Grill + fan		-	-	•	-
Grill + turnspit		-	-	-	-
Grill + fan + turnspit		-	-	-	-
Static + fan		•	-	-	•
Multifunction (circular + fan)		•	-	-	•
Defrosting		•	-	•	•
Turnspit		-	-	-	-
Gas		-	-	•	-
Grill Gas		-	•	-	-
Grill Gas + turnspit		-	-	-	-
Gas + fan		-	•	•	-
Gas + turnspit		-	-	-	-
Upper element + fan		-	-	-	-
Low temp		-	-	-	-
Ambiente Light		-	-	-	-
PROGRAMMING					
Clock-Oven Control System		Electronic programmer touch	Minute minder 60’	Minute minder 60’	Standard electronic programmer
OVEN CAVITY					
Black enamel		-	-	-	-
Titanium grey (ETC)		•	•	•	•
Bronzed Enamel		-	-	-	-
Glass Door Type		Full glass flat	Full glass flat	Full glass flat	Full glass flat
Cold door		•	•	•	•
OVEN CAVITY EQUIPMENT					
Smooth sides with chromed racks		•	•	•	•
n° grids		1	1	1	1
n° driptray		2	1	1	2
Other accessories		-	-	-	-
Turnspit		-	-	-	-
n° level with telescopic guide		2	-	-	-
TECHNICAL FEATURES					
Power	kW	2,870	0,075	1,375	2,870
Voltage/Frequency	V/Hz	220-240 / 50-60	220-240 / 50-60	220-240 / 50-60	220-240 / 50-60
Efficiency energy class [1]		A	A	A	A
Net volume	lt	64	60	63	64
n° glass		3	3	3	3
n° lamps		1	1	1	1
Tangential cooling fan		•	•	•	•
Energy consumption conventional [1]	kWh	0,88	1,59 / 5,71	1,59 / 5,71	0,88
Energy consumption fan forced [1]	kWh	0,80	1,77 / 6,37	1,77 / 6,37	0,80
Maximum temperature	°C	250	250	250	250
DIMENSIONS					
Product HxWxD	mm	590x597x543	590x597x543	590x597x543	590x597x543
Built-in HxWxD	mm	583x554x564	583x554x564	583x554x564	583x554x564
Package HxWxD	mm	700x640x640	700x640x640	700x640x640	700x640x640

[1] from January 2015, according to regulation 65/2014

TECHNICAL FEATURES OVENS

		GFS53IX	GFP993IX	GFN94AV	GFN94RM
Collection		Contemporaneo	Contemporaneo	Tradizione	Tradizione
Type		Multifunction	Multifunction	Multifunction	Multifunction
Colour		St. steel	Black / St.steel strips	Avena	Copper
FUNCTIONS					
Programs number		5	9	9	9
Light		-	•	-	-
Pizza		-	•	•	•
Pre-heating		-	-	•	•
Traditional cooking		•	•	•	•
Bottom element		•	•	-	-
Bottom element + fan		•	-	-	-
Upper element		-	-	-	-
Grill		-	•	•	•
Grill + upper element (double grill)		-	•	•	•
Double grill + fan		-	•	•	•
Double grill + turnspit		-	-	-	-
Double grill + fan + turnspit		-	-	-	-
Grill + fan		•	-	-	-
Grill + turnspit		-	-	-	-
Grill + fan + turnspit		-	-	-	-
Static + fan		•	•	•	•
Multifunction (circular + fan)		-	•	•	•
Defrosting		-	-	•	•
Turnspit		-	-	-	-
Gas		-	-	-	-
Grill Gas		-	-	-	-
Grill Gas + turnspit		-	-	-	-
Gas + fan		-	-	-	-
Gas + turnspit		-	-	-	-
Upper element + fan		-	-	-	-
Low temp		-	-	-	-
Ambiente Light		-	-	-	-
PROGRAMMING					
Clock-Oven Control System		Standard electronic programmer	Electronic programmer touch	Analogic programmer	Analogic programmer
OVEN CAVITY					
Black enamel		-	•	-	-
Titanium grey (ETC)		•	-	•	•
Bronzed Enamel		-	-	-	-
Glass Door Type		Full glass flat	Full glass flat	Full glass flat	Full glass flat
Cold door		•	•	•	•
OVEN CAVITY EQUIPMENT					
Smooth sides with chromed racks		•	•	•	•
n° grids		1	2	1	1
n° driptray		1	1	2	2
Other accessories		-	Pastry tray (15 mm)	-	-
Turnspit		-	•	-	-
n° level with telescopic guide		-	-	2	2
TECHNICAL FEATURES					
Power	kW	2,670	3,500	2,870	2,870
Voltage/Frequency	V/Hz	220-240 / 50-60	220-240 / 50-60	220-240 / 50-60	220-240 / 50-60
Efficiency energy class [1]		A	A	A	A
Net volume	lt	64	89	64	64
n° glass		3	3	3	3
n° lamps		1	2	1	1
Tangential cooling fan		•	•	•	•
Energy consumption conventional [1]	kWh	0,88	0,98	0,88	0,88
Energy consumption fan forced [1]	kWh	0,80	1,05	0,80	0,80
Maximum temperature	°C	250	-	250	250
DIMENSIONS					
Product HxWxD	mm	590x597x543	893x477x538	590x597x543	590x597x543
Built-in HxWxD	mm	583x554x564	860x480x860	583x554x564	583x554x564
Package HxWxD	mm	700x640x640	980x690x560	700x640x640	700x640x640

[1] from January 2015, according to regulation 65/2014

		GFN94AN	GFN94TF	GFN94BA	GFN94PN
Collection		Tradizione	Tradizione	Tradizione	Tradizione
Type		Multifunction	Multifunction	Multifunction	Multifunction
Colour		Anthracite	Terre de France	White	Cream
FUNCTIONS					
Programs number		9	9	9	9
Light		-	-	-	-
Pizza		•	•	•	•
Pre-heating		•	•	•	•
Traditional cooking		•	•	•	•
Bottom element		-	-	-	-
Bottom element + fan		-	-	-	-
Upper element		-	-	-	-
Grill		•	•	•	•
Grill + upper element (double grill)		•	•	•	•
Double grill + fan		•	•	•	•
Double grill + turnspit		-	-	-	-
Double grill + fan + turnspit		-	-	-	-
Grill + fan		-	-	-	-
Grill + turnspit		-	-	-	-
Grill + fan + turnspit		-	-	-	-
Static + fan		•	•	•	•
Multifunction (circular + fan)		•	•	•	•
Defrosting		•	•	•	•
Turnspit		-	-	-	-
Gas		-	-	-	-
Grill Gas		-	-	-	-
Grill Gas + turnspit		-	-	-	-
Gas + fan		-	-	-	-
Gas + turnspit		-	-	-	-
Upper element + fan		-	-	-	-
Low temp		-	-	-	-
Ambiente Light		-	-	-	-
PROGRAMMING					
Clock-Oven Control System		Analogic programmer	Analogic programmer	Analogic programmer	Analogic programmer
OVEN CAVITY					
Black enamel		-	-	-	-
Titanium grey (ETC)		•	•	•	•
Bronzed Enamel		-	-	-	-
Glass Door Type		Full glass flat	Full glass flat	Full glass flat	Full glass flat
Cold door		•	•	•	•
OVEN CAVITY EQUIPMENT					
Smooth sides with chromed racks		•	•	•	•
n° grids		1	1	1	1
n° driptray		2	2	2	2
Other accessories		-	-	-	-
Turnspit		-	-	-	-
n° level with telescopic guide		2	2	2	2
TECHNICAL FEATURES					
Power	kW	2,870	2,870	2,870	2,870
Voltage/Frequency	V/Hz	220-240 / 50-60	220-240 / 50-60	220-240 / 50-60	220-240 / 50-60
Efficiency energy class [1]		A	A	A	A
Net volume	lt	64	64	64	64
n° glass		3	3	3	3
n° lamps		1	1	1	1
Tangential cooling fan		•	•	•	•
Energy consumption conventional [1]	kWh	0,88	0,88	0,88	0,88
Energy consumption fan forced [1]	kWh	0,80	0,80	0,80	0,80
Maximum temperature	°C	250	250	250	250
DIMENSIONS					
Product HxWxD	mm	590x597x543	590x597x543	590x597x543	590x597x543
Built-in HxWxD	mm	583x554x564	583x554x564	583x554x564	583x554x564
Package HxWxD	mm	700x640x640	700x640x640	700x640x640	700x640x640

[1] from January 2015, according to regulation 65/2014

TECHNICAL FEATURES OVENS

		GFN54AV	GFN54RM	GFN54AN	GFN54TF
Collection		Tradizione	Tradizione	Tradizione	Tradizione
Type		Multifunction	Multifunction	Multifunction	Multifunction
Colour		Avena	Copper	Anthracite	Terre de France
FUNCTIONS					
Programs number		5	5	5	5
Light		-	-	-	-
Pizza		-	-	-	-
Pre-heating		-	-	-	-
Traditional cooking		•	•	•	•
Bottom element		•	•	•	•
Bottom element + fan		•	•	•	•
Upper element		-	-	-	-
Grill		-	-	-	-
Grill + upper element (double grill)		-	-	-	-
Double grill + fan		-	-	-	-
Double grill + turnspit		-	-	-	-
Double grill + fan + turnspit		-	-	-	-
Grill + fan		•	•	•	•
Grill + turnspit		-	-	-	-
Grill + fan + turnspit		-	-	-	-
Static + fan		•	•	•	•
Multifunction (circular + fan)		-	-	-	-
Defrosting		-	-	-	-
Turnspit		-	-	-	-
Gas		-	-	-	-
Grill Gas		-	-	-	-
Grill Gas + turnspit		-	-	-	-
Gas + fan		-	-	-	-
Gas + turnspit		-	-	-	-
Upper element + fan		-	-	-	-
Low temp		-	-	-	-
Ambiente Light		-	-	-	-
PROGRAMMING					
Clock-Oven Control System		Analogic programmer	Analogic programmer	Analogic programmer	Analogic programmer
OVEN CAVITY					
Black enamel		-	-	-	-
Titanium grey (ETC)		•	•	•	•
Bronzed Enamel		-	-	-	-
Glass Door Type		Full glass flat	Full glass flat	Full glass flat	Full glass flat
Cold door		•	•	•	•
OVEN CAVITY EQUIPMENT					
Smooth sides with chromed racks		•	•	•	•
n° grids		1	1	1	1
n° driptray		1	1	1	1
Other accessories		-	-	-	-
Turnspit		-	-	-	-
n° level with telescopic guide		-	-	-	-
TECHNICAL FEATURES					
Power	kW	2,670	2,670	2,670	2,670
Voltage/Frequency	V/Hz	220-240 / 50-60	220-240 / 50-60	220-240 / 50-60	220-240 / 50-60
Efficiency energy class [1]		A	A	A	A
Net volume	lt	64	64	64	64
n° glass		3	3	3	3
n° lamps		1	1	1	1
Tangential cooling fan		•	•	•	•
Energy consumption conventional [1]	kWh	0,88	0,88	0,88	0,88
Energy consumption fan forced [1]	kWh	0,80	0,80	0,80	0,80
Maximum temperature	°C	250	250	250	250
DIMENSIONS					
Product HxWxD	mm	590x597x543	590x597x543	590x597x543	590x597x543
Built-in HxWxD	mm	583x554x564	583x554x564	583x554x564	583x554x564
Package HxWxD	mm	700x640x640	700x640x640	700x640x640	700x640x640

[1] from January 2015, according to regulation 65/2014

		GFN54BA	GFN54PN	GFNV25AV	GFNV25TF
Collection		Tradizione	Tradizione	Tradizione	Tradizione
Type		Multifunction	Multifunction	Gas Multifunction (electric grill)	Gas Multifunction (electric grill)
Colour		White	Cream	Avena	Terre de France
FUNCTIONS					
Programs number		5	5	6	6
Light		-	-	•	•
Pizza		-	-	-	-
Pre-heating		-	-	-	-
Traditional cooking		•	•	-	-
Bottom element		•	•	-	-
Bottom element + fan		•	•	-	-
Upper element		-	-	-	-
Grill		-	-	•	•
Grill + upper element (double grill)		-	-	-	-
Double grill + fan		-	-	-	-
Double grill + turnspit		-	-	-	-
Double grill + fan + turnspit		-	-	-	-
Grill + fan		•	•	•	•
Grill + turnspit		-	-	-	-
Grill + fan + turnspit		-	-	-	-
Static + fan		•	•	-	-
Multifunction (circular + fan)		-	-	-	-
Defrosting		-	-	•	•
Turnspit		-	-	-	-
Gas		-	-	•	•
Grill Gas		-	-	-	-
Grill Gas + turnspit		-	-	-	-
Gas + fan		-	-	•	•
Gas + turnspit		-	-	-	-
Upper element + fan		-	-	-	-
Low temp		-	-	-	-
Ambiente Light		-	-	-	-
PROGRAMMING					
Clock-Oven Control System		Analogic programmer	Analogic programmer	Analogic minute minder	Analogic minute minder
OVEN CAVITY					
Black enamel		-	-	-	-
Titanium grey (ETC)		•	•	•	•
Bronzed Enamel		-	-	-	-
Glass Door Type		Full glass flat	Full glass flat	Full glass flat	Full glass flat
Cold door		•	•	•	•
OVEN CAVITY EQUIPMENT					
Smooth sides with chromed racks		•	•	•	•
n° grids		1	1	1	1
n° driptray		1	1	1	1
Other accessories		-	-	-	-
Turnspit		-	-	-	-
n° level with telescopic guide		-	-	-	-
TECHNICAL FEATURES					
Power	kW	2,670	2,670	1,375	1,375
Voltage/Frequency	V/Hz	220-240 / 50-60	220-240 / 50-60	220-240 / 50-60	220-240 / 50-60
Efficiency energy class [1]		A	A	A	A
Net volume	lt	64	64	63	63
n° glass		3	3	3	3
n° lamps		1	1	1	1
Tangential cooling fan		•	•	•	•
Energy consumption conventional [1]	kWh	0,88	0,88	1,59 / 5,71	1,59 / 5,71
Energy consumption fan forced [1]	kWh	0,80	0,80	1,77 / 6,37	1,77 / 6,37
Maximum temperature	°C	250	250	250	250
DIMENSIONS					
Product HxWxD	mm	590x597x543	590x597x543	590x597x543	590x597x543
Built-in HxWxD	mm	583x554x564	583x554x564	583x554x564	583x554x564
Package HxWxD	mm	700x640x640	700x640x640	700x640x640	700x640x640

[1] from January 2015, according to regulation 65/2014

TECHNICAL FEATURES OVENS

		GFCS16BK
Collection		Contemporaneo
Dimension	mm	600x450
Type		Compact 45 cm steam oven
Colour		Black glass
MAIN FEATURES		
Functions		4 + 1 (Steam, Regeneration, Cleaning, Descaling) + Sterilisation
Oven Capacity	lt	35
FEATURES		
Digital clock		•
Timer		Electronic 0 to 90´
Rotary plate		32cm
Defrost functions by time		•
Defrost functions by weight		•
Controls		Digital touch control
Auto menus		5
Power levels		4
Temperature levels	°C	-
Microwave power	kW	-
Grill power	kW	-
Convection power	kW	-
Turbo power		-
Maximum power	kW	1,000
Combi Microwave / Grill		-
Rack to cook "au gratin"		-
Inner light		•
Adjustable feet		-
Power cord with plug		•
End cooking signal		•
Preset function		•
CAVITY AND SAFETY		
Interior cavity		St. steel
n° glass		2
Safety child lock		•
Tangential cooling fan		•
ACCESSORIES		
Smooth sides with chromed racks		• (4 levels)
Enamelled tray		-
Inox tray		1 Perforated/ 1 non perforated (40 and 20 mm)
Water tank	lt	1,4
Telescopic grids		-
TECHNICAL FEATURES		
Voltage/Frequency	V/Hz	220-240 / 50
Plug Type		Schucko
Efficiency energy class		-
Energy consumption conventional [1]	kWh	-
Energy consumption fan forced [1]	kWh	-
Net Oven Capacity	lt	35
WEIGHTS & DIMENSION		
Product WxDxH	mm	595x472x455
Built-in WxHxD	mm	560-568x450x542
Cavity WxDxH	mm	420x390x210

		GFCWDIX
Collection		Contemporaneo
Type		Accessories
Colour		St. steel
MAIN FEATURES		
Nº of dish servings/settings		6
Nº of dinner plates Ø28 cm		20
Useful height	cm	10
Input power	W	430
Adjustable thermostat	°C	30-70
Thermostat control		Electromechanic
Thermal protection at 110 °C		•
Illuminated ON /OFF switch		•
Anti-sliding mat		•
Opening system		push / pull
WEIGHTS & DIMENSIONS		
Product HxWxD	mm	139x595x542
Built-in HxWxD	mm	140x 595x542
Packed HxWxD	mm	250x645x670
Weights Gross / net	kg	20,3 / 18,0
TECHNICAL FEATURES		
Voltage/Frequency	V/Hz	220-240 / 50-60
Plug Type		Schuko
Cable length		1,5 m

[1] from January 2015, according to regulation 65/2014

		GTPS51HIX	GTP955HIX	GTP951HIX	GTP851HIX	GTP842HIX
Collection		Contemporaneo	Contemporaneo	Contemporaneo	Contemporaneo	Contemporaneo
Width	cm	75	90	90	75	75
Type		Gas	Gas	Gas	Gas	Gas
Colours		St. steel	St. steel	St. steel	St. steel	St. steel
FEATURES						
Controls		Front	Front	Front	Front	Front
Nr electric zones		-	-	-	-	-
Nr gas zones		5	5	5	5	4
Front left burner	W	3.000	1.000	1.000	1.000	300 - 4.300
Rear left burner	W	1.750	3.000	1.750	1.750	-
Front burner	W	1.000	3.800	300 - 4.300	300 - 4.300	1.000
Rear burner	W	1.750	-	-	-	1.750
Front right burner	W	800 - 4500	1.750	1.750	1.750	3.300
Rear right burner	W	-	1.750	3.000	3.000	-
Flame failure device (FFD)		•	•	•	•	•
One hand ignition		•	•	•	•	•
PAN SUPPORTS						
Enamelled pan supports		-	-	-	-	-
Cast iron pan supports		•	•	•	•	•
DIMENSIONS						
Product HxWxD	mm	90x740x500	39x860x500	35x860x500	38x740x500	38x740x500
Built-in HxWxD	mm	95x720x480	55x840x480	55x840x480	55x560x480	55x560x480

		GTP64HIX	GTP685HIX	GTPF145HIX	GTPF855HIX	GTPF685HIX
Collection		Contemporaneo	Contemporaneo	Contemporaneo	Contemporaneo	Contemporaneo
Width	cm	60	60	111,5	75	60
Type		Gas	Gas	Gas	Gas	Gas
Colours		St. steel	St. steel	St. steel	St. steel	St. steel
FEATURES						
Controls		Front	Front	Front	Front	Front
Nr electric zones		-	-	-	-	-
Nr gas zones		4	4	4	5	4
Front left burner	W	1.000	3.800	4.000	3.800	3.500
Rear left burner	W	3.000	1.000	1.000	-	1.750
Front burner	W	-	-	1.750	1.000	-
Rear burner	W	-	-	3.000	1.750	-
Front right burner	W	1.750	1.750	-	1.750	1.000
Rear right burner	W	1.750	1.750	-	3.000	1.750
Flame failure device (FFD)		•	•	•	•	•
One hand ignition		•	•	•	•	•
PAN SUPPORTS						
Enamelled pan supports		-	-	-	-	-
Cast iron pan supports		•	•	•	•	•
DIMENSIONS						
Product HxWxD	mm	38x585x500	38x585x500	70x1100x400	65x746x508	70x590x508
Built-in HxWxD	mm	55x560x480	55x560x480	1055x375	720x480	560x480

TECHNICAL FEATURES HOBS

		GTPR855HAV	GTPR855HRM	GTPR855HAN	GTPR855HTF	GTPR855HBA	GTPR855HPN
Collection		Tradizione	Tradizione	Tradizione	Tradizione	Tradizione	Tradizione
Width	cm	75	75	75	75	75	75
Type		Gas	Gas	Gas	Gas	Gas	Gas
Colours		Avena	Copper	Anthracite	Terre de France	White	Cream
FEATURES							
Controls		Front	Front	Front	Front	Front	Front
Nr electric zones		-	-	-	-	-	-
Nr gas zones		5	5	5	5	5	5
Front left burner	W	1.000	1.000	1.000	1.000	1.000	1.000
Rear left burner	W	3.000	3.000	3.000	3.000	3.000	3.000
Front burner	W	3.300	3.300	3.300	3.300	3.300	3.300
Rear burner	W	-	-	-	-	-	-
Front right burner	W	1.750	1.750	1.750	1.750	1.750	1.750
Rear right burner	W	1.750	1.750	1.750	1.750	1.750	1.750
Flame failure device (FFD)		•	•	•	•	•	•
One hand ignition		•	•	•	•	•	•
PAN SUPPORTS							
Enamelled pan supports		-	-	-	-	-	-
Cast iron pan supports		•	•	•	•	•	•
DIMENSIONS							
Product HxWxD	mm	38x740x500	38x740x500	38x740x500	38x740x500	38x740x500	38x740x500
Built-in HxWxD	mm	55x560x480	55x560x480	55x560x480	55x560x480	55x560x480	55x560x480

		GTPR645HAV	GTPR645HRM	GTPR645HAN	GTPR645HTF	GTPR645HBA	GTPR645HPN
Collection		Tradizione	Tradizione	Tradizione	Tradizione	Tradizione	Tradizione
Width	cm	60	60	60	60	60	60
Type		Gas	Gas	Gas	Gas	Gas	Gas
Colours		Avena	Copper	Anthracite	Terre de France	White	Cream
FEATURES							
Controls		Front	Front	Front	Front	Front	Front
Nr electric zones		-	-	-	-	-	-
Nr gas zones		4	4	4	4	4	4
Front left burner	W	1.000	1.000	1.000	1.000	1.000	1.000
Rear left burner	W	3.300	3.300	3.300	3.300	3.300	3.300
Front right burner	W	1.750	1.750	1.750	1.750	1.750	1.750
Rear right burner	W	1.750	1.750	1.750	1.750	1.750	1.750
Flame failure device (FFD)		•	•	•	•	•	•
One hand ignition		•	•	•	•	•	•
PAN SUPPORTS							
Enamelled pan supports		-	-	-	-	-	-
Cast iron pan supports		•	•	•	•	•	•
DIMENSIONS							
Product HxWxD	mm	38x595x500	38x595x500	38x595x500	38x595x500	38x595x500	38x595x500
Built-in HxWxD	mm	55x560x480	55x560x480	55x560x480	55x560x480	55x560x480	55x560x480

		GTIP14BK	GTIP83BK	GTIP84BK	GTIPW84BK
Collection		Contemporaneo	Contemporaneo	Contemporaneo	Contemporaneo
Width	cm	100	80	80	80
Type		Induction	Induction	Induction	Induction
Colours		Black glass	Black glass	Black glass	Black glass
SPECIFICATION					
Type of control		Sliders touch control	Slider touch control	Slider touch control	Slider touch control
Control position		Front	Front	Front	Front
Level of power		9 level	9 level	9 level	9 level
Front left heating element	mm/W	Ø 210 - 2.900/3.700	Ø 190 - 2.300/3.000	Ø 280 - 2.600/3.700	220x180 - 2.100/2.600/3.700
Back left heating element	mm/W	Ø 210 - 2.900/3.700	-	Ø 180 - 2.300/3.000	220x180 - 2.100/2.600/3.700
Central heating element	mm/W	-	Ø 150 - 1.100/1.400	-	-
Back right heating element	mm/W	Ø 210 - 2.900/3.700	-	Ø 180 - 2.300/3.000	Ø 180 - 1850/2.300/3.000
Front right heating element	mm/W	Ø 210 - 2.900/3.700	Ø 250 - 2.300/3.000	Ø 210 - 2.900/3.700	Ø 314 - 2.500/3.200
FEATURES					
Total power	W	7.400	6.700	7.400	7.400
On/Off		-	-	-	-
Stop&Go		•	•	•	•
Booster		4 double	3	4 double	•
Heat up		•	•	•	•
Timer		•	•	•	•
Minute Minder		•	•	•	•
Low temp	°C	42 - 70 - 94	low temp between 0 and 1	42 - 70	42 - 70 - 93
Pot diameter detector/ Pan detection		•	•	•	•
Residual Heat		•	•	•	•
Child safety lock (Locking touch)		•	•	•	•
Overflow safety device		•	•	•	•
Automatic Stop		•	•	•	•
Power management		•	•	•	•
Power cord		•	•	•	•
Cable length	mm	1500	1500	1500	1500
Screaper		-	-	-	-
Voltage/Frequency	V/Hz	220-240 / 50-60	220-240 / 50-60	220-240 / 50-60	220-240 / 50-60
DIMENSIONS					
Product WxDxH	mm	1000x410x49	780x370x58	780x520x49	780 x 520mm, R=5
Built-in WxDxH	mm	985x395	760x340	750x490	765 x 495mm - thickness: 82mm + 6mm glass

TECHNICAL FEATURES HOBS

		GTIP64WH	GTIP64BK	GTIP63WH	GTIP63BK
Collection		Contemporaneo	Contemporaneo	Contemporaneo	Contemporaneo
Width	cm	60	60	60	60
Type		Induction	Induction	Induction	Induction
Colours		White glass	Black glass	White glass	Black glass
SPECIFICATION					
Type of control		Slider control	Slider control	Slider control	Slider control
Control position		Front	Front	Front	Front
Level of power		9	9	9	9
Front left heating element	mm/W	200 - 1.400/2.000 BOOSTER	200 - 1.400/2.000 BOOSTER	200 - 2.300/3.000 BOOSTER	200 - 2.300/3.000 BOOSTER
Back left heating element	mm/W	160 - 1.100/1.400 BOOSTER	160 - 1.100/1.400 BOOSTER	160 - 1.200/1.400 BOOSTER	160 - 1.200/1.400 BOOSTER
Central heating element	mm/W	-	-	-	-
Back right heating element	mm/W	200 - 2.300/3.000 BOOSTER	200 - 2.300/3.000 BOOSTER	250 - 2.300/3.000 BOOSTER	250 - 2.300/3.000 BOOSTER
Front right heating element	mm/W	160 - 1.100/1.400W BOOSTER	160 - 1.100/1.400 BOOSTER	-	-
FEATURES					
Total power	W	7.100	7.100	6.700	6.700
On/Off		•	•	•	•
Stop&Go		•	•	•	•
Booster		•	•	•	•
Heat up		•	•	•	•
Timer		•	•	•	•
Minute Minder		•	•	•	•
Low temp	°C	70	70	70	70
Pot diameter detector/ Pan detection		•	•	•	•
Residual Heat		•	•	•	•
Child safety lock (Locking touch)		•	•	•	•
Overflow safety device		•	•	•	•
Automatic Stop		•	•	•	•
Power management		•	•	•	•
Power cord		•	•	•	•
Cable length	mm	1120	1200	1120	1120
Screaper		-	-	-	-
Voltage/Frequency	V/Hz	220-240 / 50-60	220-240 / 50-60	220-240 / 50-60	220-240 / 50-60
DIMENSIONS					
Product WxDxH	mm	590x520	590x520	590x520	590x520
Built-in WxDxH	mm	560x490	560x490	560x490	560x490

		GTIPW41BK	GTIP42BK	GTPN42BK
Collection		Contemporaneo	Contemporaneo	Contemporaneo
Width	cm	38	38	38
Type		Induction	Induction	Teppanyaki
Colours		Black glass	Black glass	St. steel grill plate - black glass
SPECIFICATION				
Type of control		Slider touch control	Sliders touch control	Touch control
Control position		Front	Front	Front
Level of power		9 level	9 level	9
Front left heating element	mm/W	310 - 2.300/3.000	220x180 - 2.100/2.600/3.700	1.400
Back left heating element	mm/W		220x180 - 2.100/2.600/3.700	1.400
Central heating element	mm/W	-	-	-
Back right heating element	mm/W	-	-	-
Front right heating element	mm/W	-	-	-
FEATURES				
Total power	W	3.000	3.700	2.800
On/Off		-	-	-
Stop&Go		•	•	-
Booster		•	•	-
Heat up		•	•	-
Timer		•	•	•
Minute Minder		•	•	•
Low temp	°C	42 - 70 - 93	automatic temperatures	-
Pot diameter detector/ Pan detection		•	•	-
Residual Heat		•	•	•
Child safety lock (Locking touch)		•	•	•
Overflow safety device		•	•	•
Automatic Stop		•	•	•
Power management		•	•	•
Power cord		•	•	•
Cable length	mm	1500	1500	1500
Screaper		-	-	-
Voltage/Frequency	V/Hz	220-240 / 50-60	220-240 / 50-60	220-240 / 50-60
DIMENSIONS				
Product WxDxH	mm	520x380x121	520x380x48	520x380x64
Built-in WxDxH	mm	490x370	490x360	490x360

TECHNICAL FEATURES HOBS

		GVP415HBK	GVP42HBK	GT415HIX	GT425HIX
Collection		Contemporaneo	Contemporaneo	Contemporaneo	Contemporaneo
Width	cm	38	38	37	37
Type		Crystal Domino	Crystal Domino	Domino	Domino
Colours		Black glass	Black glass	St. steel	St. steel
FEATURES					
Controls position		Front	Front	Front	Front
Nr gas zones		1	2	1	2
Front burner	W	5.000	1.000	3.800	1.000
Rear burner	W	-	3.000	-	3.000
Flame failure device (FFD)		•	•	•	•
One hand ignition		•	•	•	•
PAN SUPPORT					
Enamelled pan supports		-	-	-	-
Cast iron pan supports		•	•	•	•
DIMENSIONS					
Product HxWxD	mm	520x380x55	520x380x55	45x370x500	45x370x500
Built-in HxWxD	mm	495x350	495x350	55x350x490	55x350x490
Packaging HxWxD	mm	555x440x145	555x440x145	-	-

		GTHP85T	GTHP65T	GTHP63T	GTHP42BK
Collection		Contemporaneo	Contemporaneo	Contemporaneo	Contemporaneo
Size	cm	80	60	60	38
Type		Ceramic glass	Ceramic glass	Ceramic glass	Ceramic Domino
Colours		Black	Black	Black	Black glass
FEATURES					
Frame		-	-	-	-
Control		Touch	Touch	Touch	Touch
Total power	W	6.700	6.700	5.400	3.000
SPECIFICATION					
Extensible hotplates		2	2	1	-
Nr of power levels		9	9	9	9
Front left heating element	mm/W	Ø 120/210 - 700/2.100	Ø 210/120 - 2.100/700	Ø 180 - 1.800	Ø 155 -1.200
Back left heating element	mm/W	Ø 145/1.200	Ø 145 - 1.200	Ø 145 - 1.200	Ø 190 -1.800
Middle heating element	mm/W	-	-	-	-
Front right heating element	mm/W	Ø 145/1.200	Ø 145 - 1.200	Ø 275/210 - 2.400/1.500	-
Back right heating element	mm/W	Ø 170/265 -1.400/2.200	Ø 170/265 -1.400/2.200	-	-
High-light		4	4	3	2
FEATURES					
Memory		-	-	-	•
Timer		•	•	•	•
Heat up		•	•	-	•
Electric cable		•	•	•	•
Voltage/Frequency	V/Hz	220-240 / 50-60	220-240 / 50-60	220-240 / 50-60	220-240 / 50-60
Scrapper		•	•	•	-
SAFETY					
Residual heat indicator		•	•	•	•
Child safety lock		•	•	•	•
Overflow safety device		•	•	•	•
Automatic stop		•	•	•	•
DIMENSIONS					
Product WxDxH	mm	770x510x48	580x510x48	580x510x48	520x380x45
Built-in WxDxH	mm	750x490	560x490	560x490	490x350x41

		GVP145HBK	GVP88HBK	GVP755HBK	GVP755HWH
Collection		Contemporaneo	Contemporaneo	Contemporaneo	Contemporaneo
Width	cm	100	75	75	75
Type		Crystal gas	Crystal gas	Crystal gas	Crystal gas
Colours		Black	Black	Black	White
FEATURES					
Controls		Front	Front	Front	Front
Nr gas zones		4	4	5	5
Front left burner	W	3.800	1.750	1.000	1.000
Rear left burner	W	-	3.000	3.000	3.000
Front burner	W	1.000	-	-	-
Rear burner	W	1.750	-	3.500	3.500
Front right burner	W	3.000	1.000	1.650	1.650
Rear right burner	W	-	1.750	1.650	1.650
Flame failure device (FFD)		•	•	•	•
One hand ignition		•	•	•	•
Cast iron pan supports		•	•	•	•
DIMENSIONS					
Product HxWxD	mm	100x400x50	750x510x50	750x510x50	750x510x50
Built-in HxWxD	mm	955x365	700x480	550x470	550x470
Packaging HxWxD	mm	1070x470x150	810x560x150	800x580x150	800x580x150

		GVP685HBK	GVP685HWH	GVP635HBK
Collection		Contemporaneo	Contemporaneo	Contemporaneo
Width	cm	60	60	60
Type		Crystal gas	Crystal gas	Crystal gas
Colours		Black	White	Black
FEATURES				
Controls		Front right and left	Front right and left	Front
Nr gas zones		4	4	3
Front left burner	W	3.500	3.500	1.000
Rear left burner	W	-	-	1.650
Front burner	W	1.000	1.000	-
Rear burner	W	1.650	1.650	-
Front right burner	W	3.000	3.000	3.500
Rear right burner	W	-	-	-
Flame failure device (FFD)		•	•	•
One hand ignition		•	•	•
Cast iron pan supports		•	•	•
DIMENSIONS				
Product HxWxD	mm	600x510x50	600x510x50	600x510x50
Built-in HxWxD	mm	550x470	550x470	550x470
Packaging HxWxD	mm	700x580x150	700x580x150	700x580x150

TECHNICAL FEATURES HOBS

		GHIL55IX	GHIK58WH	GHIA85IX	GHWK68WH
Collection		Contemporaneo	Contemporaneo	Contemporaneo	Contemporaneo
Dimensions	cm	51,5x40,5	50x50	80,4x49,0	67
Type		Island	Island	Island	Wall
Colour		St. steel	White painted + St. steel box	Satinated glass + St. Steel lateral sides	White glass + St. steel
FEATURES					
Suction power	m^3/h	520	802	496	802
Suction power (free delivery)	m^3/h	540	-	434	-
Noise level - max speed Power	dBa	68	61	57	61
Noise level - speed level 1	dBa	49	35	44	35
N° of blower		1	1	1	1
Speeds		3+Boost	3+Boost	3+Boost	3+Boost
Booster		•	•	•	•
Delay start		•	-	-	-
Clean Air		•	-	-	-
Saturation filter alarm		•	-	-	-
Lamps		4x20W	LED 4x1W	neon bulb 2x13W + led finger 1x7w	LED 2x3w
Perimetral aspiration		•	•		•
Grease filters		1	1	1	1
Carbon filters		2	•	•	•
Controls		Electronic	Electronic	Electronic	Electronic
Air outlet size	mm	Ø 150	Ø 150 (reduction 120)	Ø 150 (reduction 120)	Ø 150 (reduction 120)
Plug		•	-	-	-
Cable length	cm	150	120	120	120
No return valve		•	•	•	•
Motor power	W	250	270	270	270
Voltage/Frequency	V/Hz	220-240 / 50 Hz	220-240 / 50 Hz	220-240 / 50 Hz	220-240 / 50 Hz
Efficiency energy class [1]		D	C	C	C
Remote control		•	optional	optional	optional
DIMENSIONS					
Product HxWxD	mm	1305xØ515	500x500x470	800x488x645	676x440x360
Packing HxWxD	mm	581x521x532 + 730x680x540	560x560x930	850x550x680	720x520x680

[1] from January 2015, according to regulation 65/2014

		GHGP89BK	GHGP89WH	GHVP98BK	GHVP68BK
Collection		Contemporaneo	Contemporaneo	Contemporaneo	Contemporaneo
Dimensions	cm	80	80	90	60
Type		Wall	Wall	Downdraft	Downdraft
Colour		Black glass	White glass	St. steel + black glass	St. steel + black glass
FEATURES					
Suction power	m^3/h	860	860	755	755
Suction power (free delivery)	m^3/h	920	920	850	850
Noise level - max speed Power	dBa	70	70	72	72
Noise level - speed level 1	dBa	42	42	52	52
N° of blower		1	1	1	1
Speeds		4+Boost	4+Boost	4	4
Booster		•	•	-	-
Delay start		•	•	•	•
Clean Air		•	•	-	-
Saturation filter alarm		•	•	•	•
Lamps		2X1 W Led	2X1 W Led	-	-
Perimetral aspiration		•	•	•	•
Grease filters		2	2	2	2
Carbon filters		2	2	1	1
Controls		Touch backlit	Touch backlit	Touch	Touch
Air outlet size	mm	Ø 150 (reduction 120)	Ø 150 (reduction 120)	Ø 150	Ø 150
Plug		•	•	-	-
Cable length	cm	150	150	-	-
No return valve		•	•	•	•
Maximum power	W	278	278	350	350
Motor power	W	270	270	350	350
Voltage/Frequency	V/Hz	220-240 / 50	220-240 / 50	230/50	230/50
Efficiency energy class [1]		A	A	C	C
Remote control		optional	optional	-	-
DIMENSIONS					
Product HxWxD	mm	380/1030x800x333	380/1030x800x333	310x890x110	310x590x110
Packing HxWxD	mm	1020x650x637	1020x650x637	1005x930x570	725x930x570

[1] from January 2015, according to regulation 65/2014

TECHNICAL FEATURES HOODS

		GHIP48IX	GHIP68IX	GHIS128IX	GHIS98IX
Collection		Contemporaneo	Contemporaneo	Contemporaneo	Contemporaneo
Dimensions	cm	ø 37	60x48	120x50	90x50
Type		Island	Island	Ceiling	Ceiling
Colour		St. steel	St. steel	St. steel	St. steel
FEATURES					
Suction power	m^3/h	625	670	770	770
Suction power (free delivery)	m^3/h	650	700	790	790
Noise level - max speed Power	dBa	66 (56)	57	70	70
Noise level - speed level 1	dBa	49	45	52	52
N° of blower		1	1	1	1
Speeds		3+Boost	3+Boost	3+Boost	3+Boost
Booster		•	•	•	•
Delay start		•	-	•	•
Clean Air		•	-	•	•
Saturation filter alarm		•	•	•	•
Lamps		4x20W	4x20W	1 LED bar (6W)	1 LED bar (6W)
Perimetral aspiration		•	•	•	•
Grease filters		1	1	4	3
Carbon filters		1	•	1	1
Controls		Feel touch (optical)	Feel touch (optical)	Electronics	Electronics
Air outlet size	mm	Ø 150 (reduction 120)	Ø 150 (reduction 120)	Ø 150 (reduction 120)	Ø 150 (reduction 120)
Plug		•	•	•	•
Cable length	cm	150	150	150	150
No return valve		•	•	•	•
Maximum power	W	330	330	275	275
Motor power	W	250	250	270	270
Voltage/Frequency	V/Hz	220-240 / 50	220-240 / 50	220-240 / 50	220-240 / 50
Efficiency energy class [1]				C	C
Remote control		optional	optional	•	•
DIMENSIONS					
Product HxWxD	mm	1215xø370	770/1200x598x483	310,7x1198,6x498,6	310,7x898,6x498,6
Packing HxWxD	mm	1075x938x518	1065x995x616	1290x610x396	990x610x396

[1] from January 2015, according to regulation 65/2014

		GHBP98IX	GHFP77IX	GHFP57IX	GHPR94AV	GHPR94RM
Collection		Contemporaneo	Contemporaneo	Contemporaneo	Tradizione	Tradizione
Dimensions	cm	90	70	52	90	90
Type		Wall			Wall	Wall
Colour		St. steel / black glass	St. steel	St. steel	Avena	Copper
FEATURES						
Suction power	m³/h	770	660	660	395	395
Suction power (free delivery)	m³/h	820	690	690		
Noise level - max speed Power	dBa	64	63	63	59	59
Noise level - speed level 1	dBa	55	44	44	-	-
N° of blower		1	1	1	1	1
Speeds		3+Boost	3+Boost	3+Boost	3	3
Booster		•	•	•	-	-
Delay start		-	-	-	-	-
Clean Air		-	-	-	-	-
Saturation filter alarm		-	•	•	-	-
Lamps		2x20W	2x20W	2x20W	2x20W	2x20W
Perimetral aspiration		-	•	•	-	-
Grease filters		3	2	2	3	3
Carbon filters		-	2	2	•	•
Controls		Touch backlit	Electronics	Electronics	Slider	Slider
Air outlet size	mm	Ø 150 (reduction 120)	Ø 150 (reduction 120)	Ø 150 (reduction 120)	Ø 120	Ø 120
Plug		•	•	•	-	-
Cable length	cm	150	150	150	100	100
No return valve		•	•	•	-	-
Maximum power	W	315	290	290	-	-
Motor power	W	275	250	250	-	-
Voltage/Frequency	V/Hz	220-240 / 50	220-240 / 50	220-240 / 50	220-240 / 50	220-240 / 50
Efficiency energy class [1]		D	C	C	E	E
Remote control		-	•	•	-	-
DIMENSIONS						
Product HxWxD	mm	1060x898x460	323x520x288	323x700x288	870/1335x982x490	870/1335x982x490
Packing HxWxD	mm	1020x800x506	785x365x425	605x365x425	984x384x617	984x384x617

[1] from January 2015, according to regulation 65/2014

TECHNICAL FEATURES HOODS

		GHPR94AN	GHPR94TF	GHPR94BA	GHPR94PN
Collection		Tradizione	Tradizione	Tradizione	Tradizione
Dimensions	cm	90	90	90	90
Type		Wall	Wall	Wall	Wall
Colour		Anthracite	Terre de France	White	Cream
FEATURES					
Suction power	m^3/h	395	395	395	395
Suction power (free delivery)	m^3/h				
Noise level - max speed Power	dBa	59	59	59	59
Noise level - speed level 1	dBa	-	-	-	-
N° of blower		1	1	1	1
Speeds		3	3	3	3
Booster		-	-	-	-
Delay start		-	-	-	-
Clean Air		-	-	-	-
Saturation filter alarm		-	-	-	-
Lamps		2x20W	2x20W	2x20W	2x20W
Perimetral aspiration		-	-	-	-
Grease filters		3	3	3	3
Carbon filters		•	•	•	•
Controls		Slider	Slider	Slider	Slider
Air outlet size	mm	Ø 120	Ø 120	Ø 120	Ø 120
Plug		-	-	-	-
Cable length	cm	100	100	100	100
No return valve		-	-	-	-
Maximum power	W	-	-	-	-
Motor power	W	-	-	-	-
Voltage/Frequency	V/Hz	220-240 / 50	220-240 / 50	220-240 / 50	220-240 / 50
Efficiency energy class [1]		E	E	E	E
Remote control		-	-	-	-
DIMENSIONS					
Product HxWxD	mm	870/1335x982x490	870/1335x982x490	870/1335x982x490	870/1335x982x490
Packing HxWxD	mm	984x384x617	984x384x617	984x384x617	984x384x617

[1] from January 2015, according to regulation 65/2014

TECHNICAL FEATURES HOODS

		GHPR64AV	GHPR64RM	GHPR64AN	GHPR64TF	GHPR64BA	GHPR64PN
Collection		Tradizione	Tradizione	Tradizione	Tradizione	Tradizione	Tradizione
Dimensions	cm	60	60	60	60	60	60
Type		Wall	Wall	Wall	Wall	Wall	Wall
Colour		Avena	Copper	Anthracite	Terre de France	White	Cream
FEATURES							
Suction power	m³/h	395	395	395	395	395	395
Noise level - max speed Power	dBa	59	59	59	59	59	59
Noise level - speed level 1	dBa	-	-	-	-	-	-
N° of blower		1	1	1	1	1	1
Speeds		3	3	3	3	3	3
Booster		-	-	-	-	-	-
Delay start		-	-	-	-	-	-
Clean Air		-	-	-	-	-	-
Saturation filter alarm		-	-	-	-	-	-
Lamps		2x20W	2x20W	2x20W	2x20W	2x20W	2x20W
Perimetral aspiration		-	-	-	-	-	-
Grease filters		2	2	2	2	2	2
Carbon filters		•	•	•	•	•	•
Controls		Slider	Slider	Slider	Slider	Slider	Slider
Air outlet size	mm	Ø 120	Ø 120	Ø 120	Ø 120	Ø 120	Ø 120
Plug		-	-	-	-	-	-
Cable length	cm	100	100	100	100	100	100
No return valve		•	•	•	•	•	•
Voltage/Frequency	V/Hz	220-240 / 50	220-240 / 50	220-240 / 50	220-240 / 50	220-240 / 50	220-240 / 50
Efficiency energy class [1]		E	E	E	E	E	E
Remote control		-	-	-	-	-	-
DIMENSIONS							
Product HxWxD	mm	870/1335x682x490	870/1335x682x490	870/1335x682x490	870/1335x682x490	870/1335x682x490	870/1335x682x490
Packing HxWxD	mm	669x373x544	669x373x544	669x373x544	669x373x544	669x373x544	669x373x544

[1] from January 2015, according to regulation 65/2014

MARKETING
Glem Gas

AD & GRAPHIC DESIGN
Ikos

PHOTO
Visual Pro - Studio 129 - Terzo Piano

Glem Gas S.p.A. reserves the right unilaterally at any time to change its own products without altering the catalogue contents accordingly.

012F61.3 05/2017

GLEM

Glem Gas S.p.A.
via Modenese, 4266
41018 San Cesario S.P.
Modena - Italy
tel. +39 059 959111
fax +39 059 959150
info@glemgas.com
www.glemgas.com