GLEM

BUILT

# BUILT-IN

# BUILT-IN


*2* *Glem*
*10* **OVENS**
*25* **MICROWAVE OVEN**
*26* **COMPACT OVEN**
*28* **INDUCTION HOBS**
*32* **CERAMIC GLASS HOBS**
*38* **CRYSTAL GAS HOBS**
*42* **GAS HOBS**
*56* **DOMINO HOBS**
*64* **HOODS**
*73* *Tech info*

# *Glem World*

# PROJECT *and* EMOTION MADE *in* ITALY

Glem brand belongs to Glem Gas group established in 1959 in San Cesario, a few kilometers from Modena, in the heart of Emilia and of this territory it proudly carries on the culinary excellence, the artistic tradition, the spirit of innovation and the craftsmanship of its people. The technological and aesthetic content of our products represents our absolute value, a rigorous and emblematic image of **Made in Italy**. All products Made in Italy are assembled in our local premises and are submitted to strict quality controls so as to grant excellent performances.

# *Glem Experience*

# IO CUCINO *con* GLEM

*I cook with Glem*

"I cook with Glem" encapsulates our renewed identity, based on an impressive heritage of values for sharing, with the product at the centre of episodes from life and personal stories just waiting to be told. Investigating people's experience of using our products every day places the spotlight on our audience in its dialogue with us through social media interaction.

*Share your experience*

www.glemgas.com

Io Cucino
con
GLEM
MADE IN ITALY

# GLOBAL *and* SMART CITIZENS

We develop products according to the contemporary living, favouring materials and innovative shapes which grant charming aesthetic, ergonomic shapes, ease of use and maintenance. Our appliances become object of furniture able to perfectly adapt to the lastest fashion trends and interior design.
Pragmatism, experience and creativity are the ingredients which have enabled Glem to receive prestigious awards and praises in the design area.

DELL

PRH

## PRH (PRE-HEATING)

*The top models have a PRH (pre-heating) function that allows you to rapidly pre-heat the oven. The oven reaches the temperature of 200°C in few time, and thus reduces the total cooking time. The oven emits a tone when it reaches temperature, at which point you can set the cooking function you wish to use.*

# MODERN LOOK, HIGH PERFORMANCE

### PIZZA

*This special Pizza program allows you to cook pizzas at the exact same temperature as you would in a wood oven - evenly and in just a few minutes. This program is also perfect for baking fresh focaccia and bread.*

### MULTIFUNCTION GAS OVEN WITH FAN

*Glem has created an innovative oven which combines all the features of a multifunction electric oven with those of a gas oven. The traditional cooking of a gas oven, ideal for roasting and baking, combined with fan forced ventilation provides a great heat distribution for single and multi-level cooking. More recipes prepared in less time and with less energy consumption.*

### PRESET TEMPERATURE

*Thanks to the electronic control of the temperature, the oven will indicate the ideal preset temperature for each function. This function guarantees a constant temperature inside the cavity with optimal cooking results.*

## TANGENTIAL COOLING FAN

*Tangential cooling means the oven remains cooler on the outside, to avoid heating the kitchen furniture or forming condensation. The tangential fan at the top of the oven starts up automaticallya few minuters after the oven is turned on, and a thermostat device ansures it continues to run after the oven is turned off until it has cooled down.*

# EASY *and* SAFE COOKING

### TITANIUM ENAMEL - EASY TO CLEAN

*Thanks to the low porosity of the titanium enamel, cleaning is so much easier and reduces dirt build up. The titanium enamel is resistant to the attack of acids and maintains its colour over time even after intensive use.*

### COLD DOOR

*The external temperatures are reduced thanks to the new oven door. The innovative extraction chimney increases considerably the air flow circulation inside the oven so as to have external temperatures very low.*

### MULTICHEF (FAN SWITCH)

*The Multichef allows you select between fan assisted or static cooking in gas ovens. This provides great versatility in cooking times and methods. Simply select the fan with the dedicated knob on the control panel to create perfect heat distribution inside the oven. The accurate and constant temperature of the oven browns dishes perfectly and allows you to cook more than one dish simultaneously, optimising the use of the space inside the oven.*

### FULL GLASS DOOR

*The full glass oven inner door grants stength and solidity and it also faciltates the cleanliness since it is completely smooth.*

*Contemporaneo*

## GFP16IX

***Performance and features***

Multifunction oven
Full touch controls with electronic programmer
Preset temperature
64 lt oven capacity
Tangential cooling fan
Smooth sides with chromed racks
2 shelves position with telescopic rails

***Functions:*** 13

***Safety***

Triple glass cold door

***Details***

Titanium enamelled cavity
Full flat glass inner door
Removable inner glass door

**GFP16IX**
Black glass / St. steel frame

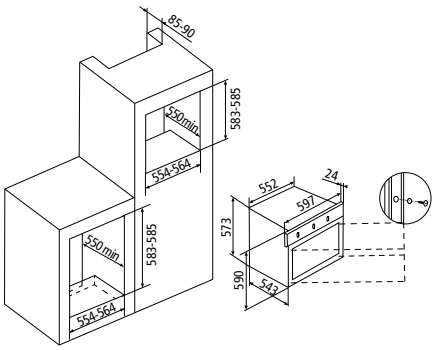


*Contemporaneo*

## GFP13IX

***Performance and features***

Multifunction oven
Led display
Full touch electronic programmer
Preset temperature
64 lt oven capacity
Tangential cooling fan
Smooth sides with chromed racks
2 shelves position with telescopic rails

***Functions:*** 11

***Safety***

Triple glass cold door

***Details***

Pop-out metal knobs
Titanium enamelled cavity
Full flat glass inner door
Removable inner glass door

**GFP13IX**
Black glass / St. steel frame

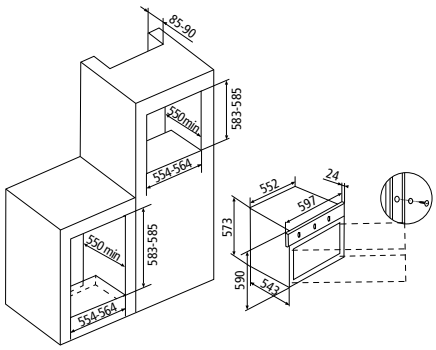

*Contemporaneo*

## GFP93IX

***Performance and features***

Multifunction oven
Electronic touch programmer
64 lt oven capacity
Tangential cooling fan
Smooth sides with chromed racks
2 shelves position with telescopic rails

***Functions:*** 9

***Safety***

Triple glass cold door

***Details***

Pop-out metal knobs
Titanium enamelled cavity
Full flat glass inner door
Removable inner glass door

**GFP93IX**
Black glass / St. steel frame

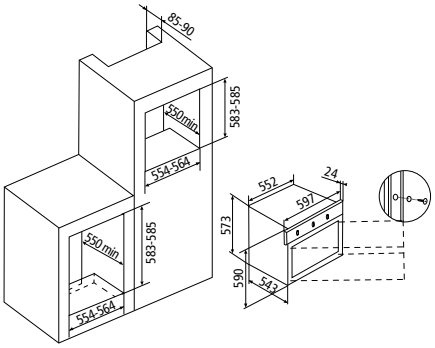


*Stylish*

## GFS93IX

***Performance and features***

Multifunction oven
Electronic programmer
64 lt oven capacity
Tangential cooling fan
Smooth sides with chromed racks

***Functions:*** 9

***Safety***

Triple glass cold door

***Details***

Titanium enamelled cavity
Full flat glass inner door
Removable inner glass door

**GFS93IX**
St. steel

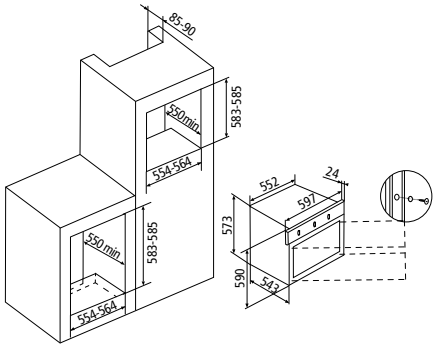

*Stylish*

## GFS53IX

***Performance and features***

Multifunction oven
Electronic programmer
64 lt oven capacity
Tangential cooling fan
Smooth sides with chromed racks

***Functions:*** 5

***Safety***

Triple glass cold door

***Details***

Titanium enamelled cavity
Full flat glass inner door
Removable inner glass door

**GFS53IX**
St. steel

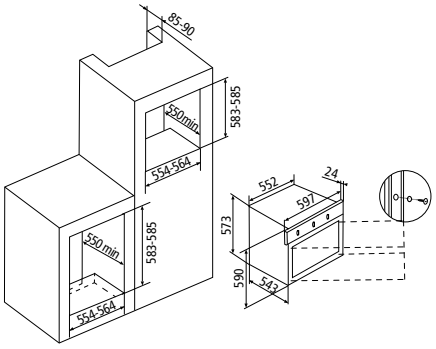


*Stylish*

## GFS92IX

***Performance and features***

Multifunction oven
Timer 120' end of cooking
64 lt oven capacity
Tangential cooling fan
Smooth sides with chromed racks

***Functions:*** 9

***Safety***

Triple glass cold door

***Details***

Titanium enamelled cavity
Full flat glass inner door
Removable inner glass door

**GFS92IX**
St. steel

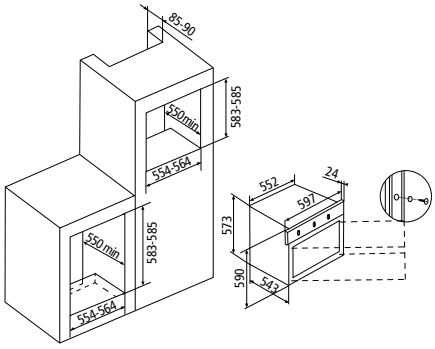

*Stylish*

## GFS52IX

***Performance and features***

Multifunction oven
Timer 120′ end of cooking
64 lt oven capacity
Tangential cooling fan
Smooth sides with chromed racks

***Functions:*** 5

***Safety***

Triple glass cold door

***Details***

Titanium enamelled cavity
Full flat glass inner door
Removable inner glass door

A 64 L T

**GFS52IX**
St. steel

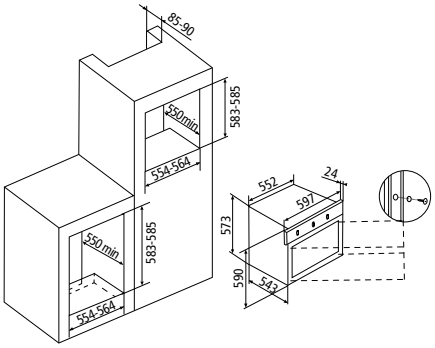


*Excellence*

## GFEA93IX

***Performance and features***

Multifunction oven
Electronic programmer
64 lt oven capacity
Tangential cooling fan
Smooth sides with chromed racks

***Functions:*** 9

***Safety***

Triple glass cold door

***Details***

Titanium enamelled cavity
Full flat glass inner door

A PRH 64 L T

**GFEA93IX**
St. steel

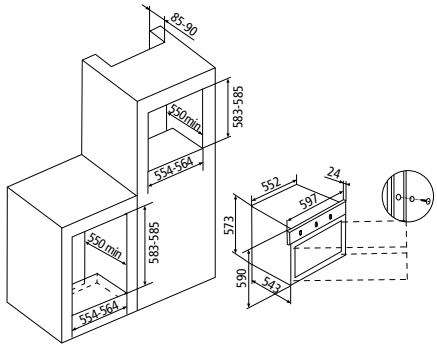

*Excellence*

## GFE92IX

***Performance and features***

Multifunction oven
Timer 120′ end of cooking
64 lt oven capacity
Tangential cooling fan
Smooth sides with chromed racks

***Functions:*** 9

***Safety***

Triple glass cold door

***Details***

Titanium enamelled cavity
Full flat glass inner door

**GFE92IX**
St. steel

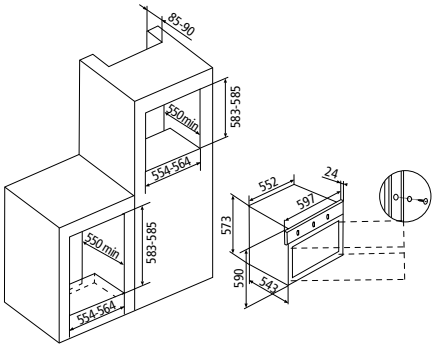


*Excellence*

## GFE52IX

***Performance and features***

Multifunction oven
Timer 120′ end of cooking
64 lt oven capacity
Tangential cooling fan
Smooth sides with chromed racks

***Functions:*** 5

***Safety***

Triple glass cold door

***Details***

Titanium enamelled cavity
Full flat glass inner door

**GFE52IX**
St. steel

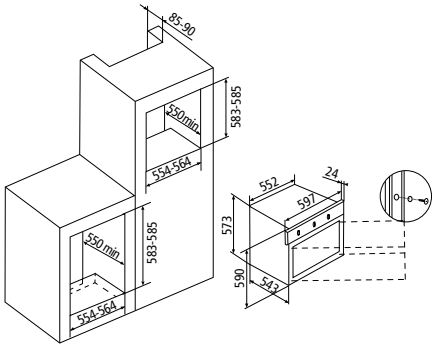

*Excellence*

## GFEV21IX

***Performance and features***

Multifunction gas oven with fan
Electric Grill
60’ Minute minder
63 lt oven capacity
Turnspit
Tangential cooling fan
Smooth sides with chromed racks

***Functions:*** 6

***Safety***

Triple glass cold door

***Details***

Titanium enamelled cavity
Full flat glass inner door

A 63 L T

**GFEV21IX**
St. steel

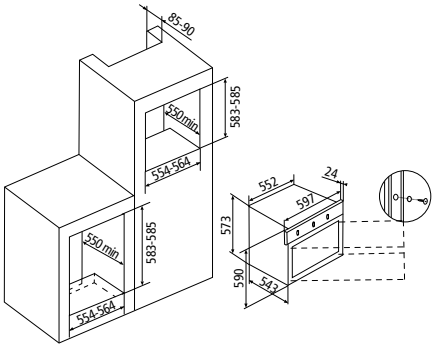


*Excellence*

## GFEW21IX

***Performance and features***

Multifunction gas oven with fan
Gas Grill
60’ Minute minder
60 lt oven capacity
Turnspit
Tangential cooling fan
Smooth sides with chromed racks

***Functions:*** 7

***Safety***

Triple glass cold door

***Details***

Titanium enamelled cavity
Full flat glass inner door

A 60 L T

**GFEW21IX**
St. steel

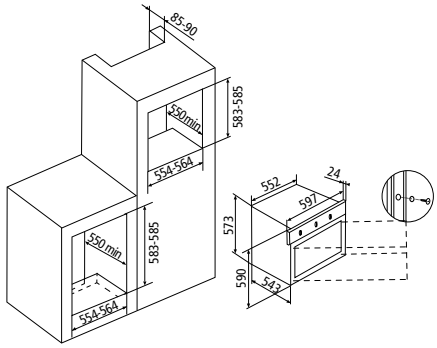

*Excellence*

## GFEG21IX

***Performance and features***

Gas oven
Gas Grill
60′ Minute minder
66 lt oven capacity
Turnspit
Tangential cooling fan
Smooth sides with chromed racks

***Functions:*** 5

***Safety***

Triple glass cold door

***Details***

Titanium enamelled cavity
Full flat glass inner door

A 66 L T

**GFEG21IX**
St. steel

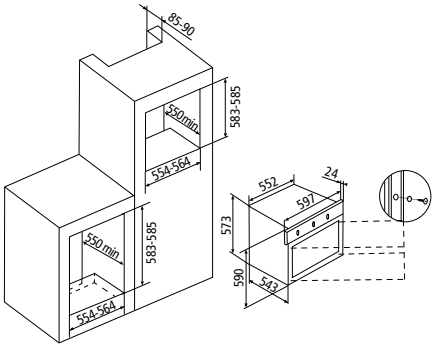


*Metropol*

## GFM52IX

***Performance and features***

Multifunction oven
Timer 120′ end of cooking
60 lt oven capacity
Tangential cooling fan

***Functions:*** 5

***Details***

Titanium enamelled cavity
Full flat glass inner door

GFM52WH

GFM52BK

A 60 L T

**GFM52IX**
St. steel

**GFM52WH**
White

**GFM52BK**
Black

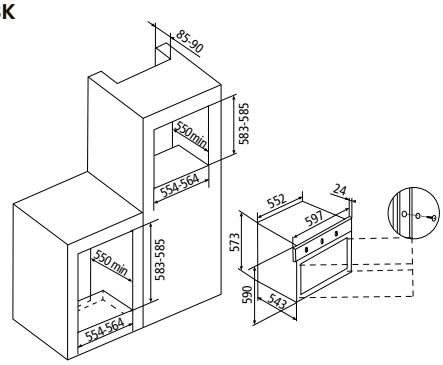

*Metropol*

## GFMF21IX

***Performance and features***

Gas oven
Electric Grill
60′ Minute minder
65 lt oven capacity
Turnspit
Tangential cooling fan

GFMF21WH

***Functions:*** 5

***Details***

Titanium enamelled cavity
Full flat glass inner door

GFMF21BK

**GFMF21IX**
St. steel

**GFMF21WH**
White

**GFMF21BK**
Black

*Metropol*

## GFMG21WH

***Performance and features***

Gas oven
Gas Grill
60′ Minute minder
62 lt oven capacity
Turnspit
Tangential cooling fan

GFMG21BK

***Functions:*** 5

***Details***

Titanium enamelled cavity
Full flat glass inner door

**GFMG21WH**
White

**GFMG21BK**
Black

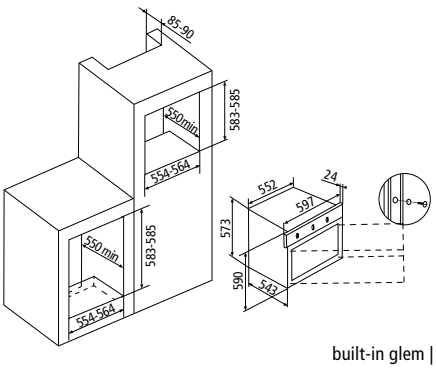


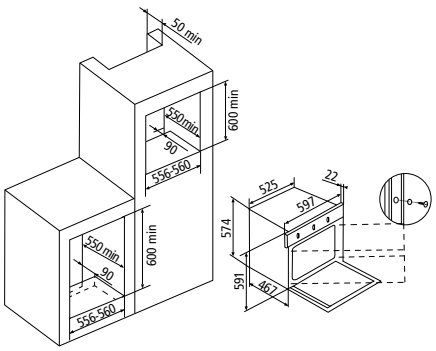

*Excellence*

## GF9W21IXN

***Performance and features***
Multifunction gas oven with fan - 90 cm
Gas Grill
60’ Minute minder
88 lt oven capacity
Turnspit
Tangential cooling fan
Smooth sides with chromed racks

***Functions:*** 10

***Details***

Full flat glass inner door

**GF9W21IXN**
St. steel

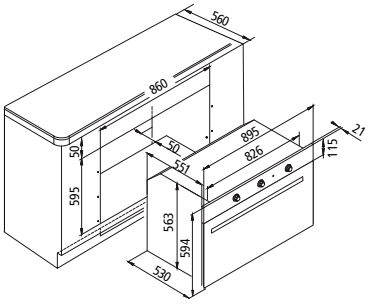

*Excellence*

## GF9F21IXN

***Performance and features***
Gas oven - 90 cm
Electric Grill
60’ Minute minder
105 lt oven capacity
Turnspit
Tangential cooling fan
Smooth sides with chromed racks

GF9F21BKN

***Functions:*** 5

***Details***

Full flat glass inner door

A 105 L

**GF9F21IXN**
St. steel

**GF9F21BKN**
Black

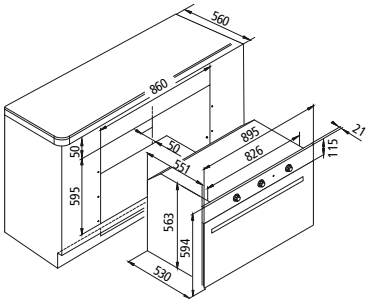


*Excellence*

## GF9G21IXN

***Performance and features***
Gas oven - 90 cm
Gas Grill
60’ Minute minder
95 lt oven capacity
Turnspit
Tangential cooling fan
Smooth sides with chromed racks

GF9G21BKN

***Functions:*** 5

***Details***

Full flat glass inner door

A 95 L

**GF9G21IXN**
St. steel

**GF9G21BKN**
Black

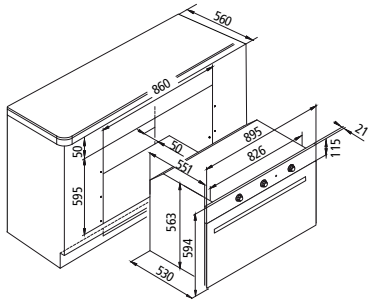

# OVENS

*Excellence*

*Contemporaneo*

## GF993IXN

***Performance and features***

Multifunction oven - 90 cm
Electronic programmer
89 lt oven capacity
Turnspit
Tangential cooling fan
Smooth sides with chromed racks

***Functions:*** 9

*Available on grill functions

***Safety***

Triple glass cold door

***Details***

Full flat glass inner door

**GF993IXN**
St. steel

## GFP993IX

***Performance and features***

Multifunction oven - 90 cm
Electronic touch programmer
89 lt oven capacity
Turnspit
Tangential cooling fan
Smooth sides with chromed racks

***Functions:*** 9

***Safety***

Triple glass cold door

***Details***

Full flat glass inner door

**GFP993IX**
Black glass / St. steel frame

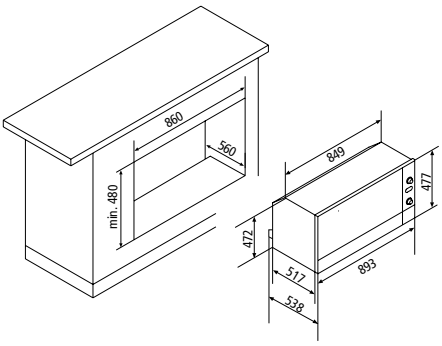


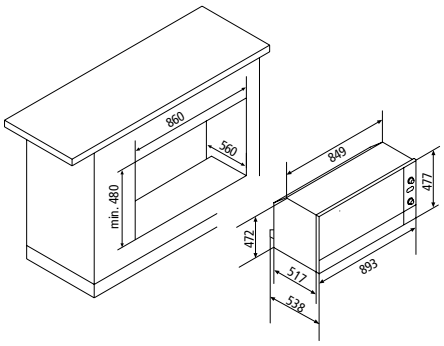

# MICROWAVE OVEN

## GMI253IX

***Performance and features***

Built-in microwave
Digital controls
25 lt oven capacity
Maximum power: 900 W
Grill power: 1000 W
5 power levels
Digital clock
Rack to cook “au gratin”
31,5 cm rotary plate

***Functions***

Electronic timer 0 to 95’ with sound signal
Defrosting by weight/time

***Safety***

Child safety lock

***Details***

St. steel oven cavity

38 cm

**GMI253IX**
St. steel

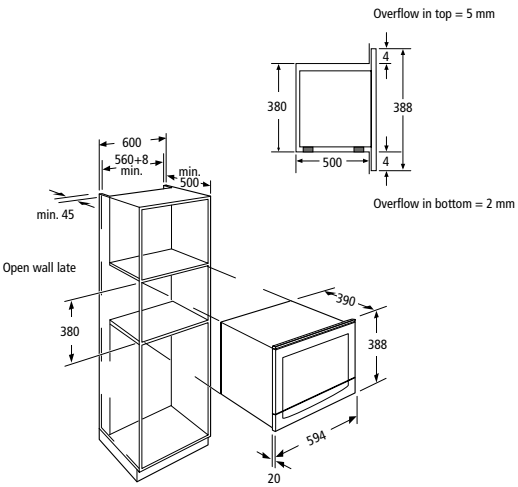


# FUNCTIONS

**OVEN LIGHT**
It is operated utilizing the oven functions.

**PIZZA**
Ideal for cooking pizza.

**PRE-HEATING**
This time-saver preheats the oven approx. 30% faster by using all the heating elements at once.

**TRADITIONAL COOKING**
The heat is given by the bottom and upper oven elements. Ideal for pastry cooking and traditional recipes.

**BOTTOM ELEMENT**
Ideal for cooking pies and to give a final touch to the cooking.

**BOTTOM ELEMENT WITH FAN**
The heat of the bottom element is spread through the fan. Ideal for soufflés.

**UPPER ELEMENT**
This function allows direct cooking.
Very good for cooking au gratin.

**STATIC + FAN**
The heat given by the bottom and upper oven elements is spread through the fan.

**UPPER ELEMENT + FAN**
This function allows direct cooking.
Very good for cooking big pieces of meat.

**GRILL**
It is used to cook “au gratin”.
Ideal for cooking “thin” meat.

**GRILL WITH FAN**
The grill along with the fan spreads the heat in a homogenous way. It is ideal for cooking medium and very thick meat.

**GRILL + TURNSPIT**
Ideal for grilling.

**DOUBLE GRILL**
The grill along with the upper element allows grilling on wider areas.

**DOUBLE GRILL WITH FAN**
Ideal for grilling meat and for cooking fish.

**MULTIFUNCTION (CIRCULAR + FAN)**
The fan moves the hot air inside the oven, allowing homogeneous cooking on 3 levels, without spreading any smell.

**DEFROSTING**
The fan is operated without any element. It assures rapid defrosting in few minutes and in the best possible way.

**LOW TEMP**
The fan together with the preset temperature at 40 °C is ideal to defrost in low temperature or manteinig hot cooked dishes.

**GAS**
Traditional gas cooking.

**GRILL GAS**
Ideal for cooking with turnspit.

**GRILL GAS WITH FAN**
The fan spreads the heat produced by the grill gas in a homogeneous way. It is ideal for baking big pieces of meat.

**GRILL GAS + TURNSPIT**
Ideal for baking meats.

**GRILL GAS WITH FAN + TURNSPIT**
The grill gas with fan function is combined with turnspit.

**GAS + TURNSPIT**
Ideal for even cooking.

**GAS WITH FAN**
The fan spreads the heat produced by the gas burner in a homogeneous way.

**GAS WITH FAN + TURNSPIT**
The gas with fan function is combined with turnspit.

COMPACT OVEN

# COMFORT *and* FUNCTIONALITY

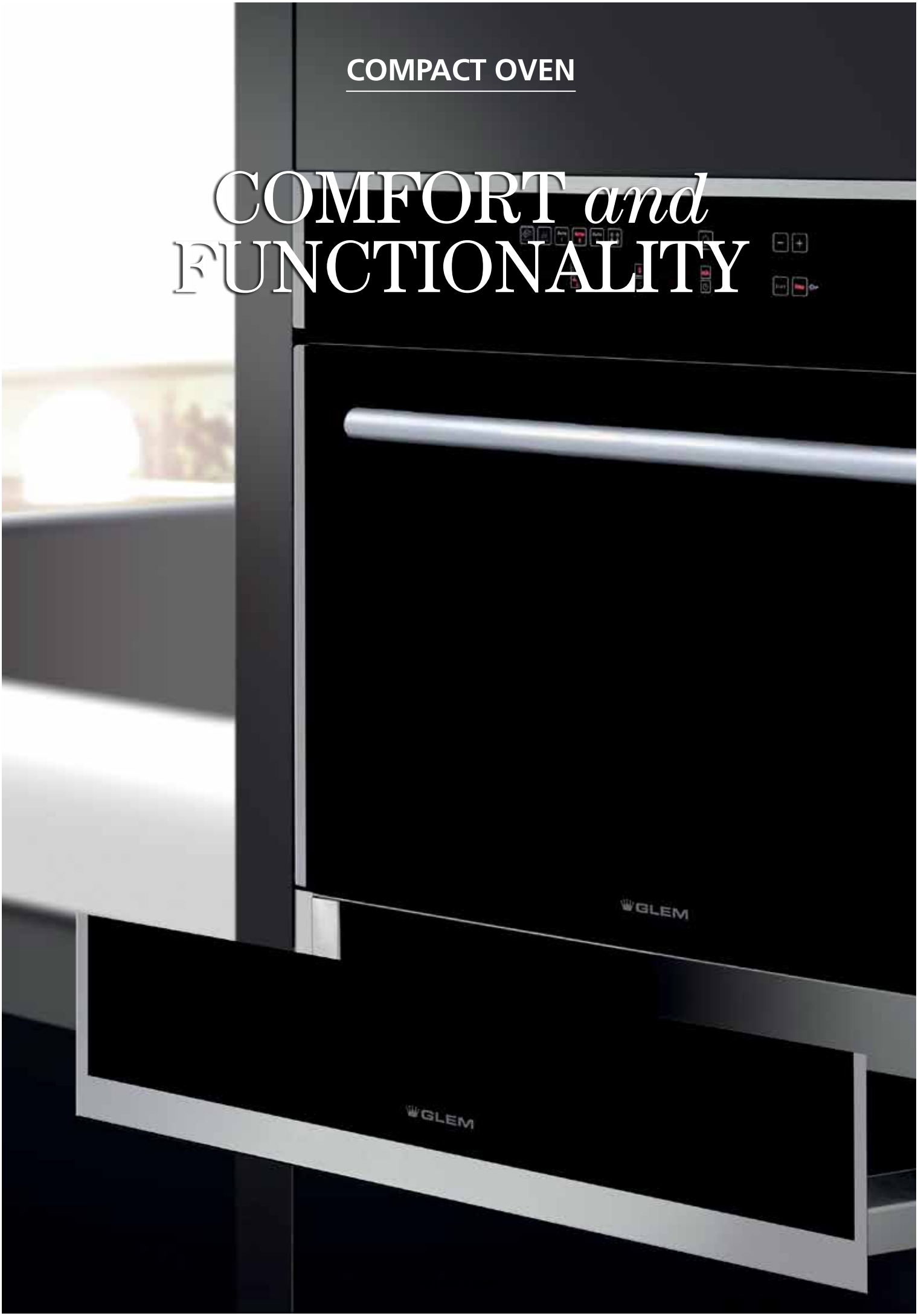

# COMPACT OVEN

*Contemporaneo*

## GFCS16BK

***Performance and features***

Compact 45 cm steam oven
Digital touch controls - red display
35 lt oven capacity
Tangential cooling fan
4 power levels
Digital clock
Water tank (1,4 lt)
Side racks (4 levels)

***Functions:*** 5
3 automatic recipes /12 menu
Electronic timer 0 to 90' with sound signal
Defrosting by weight/time
Preset function

***Safety***

Child safety lock

***Details***

St. steel oven cavity
Drop down door

**GFCS16BK**
Black glass / St. steel frame

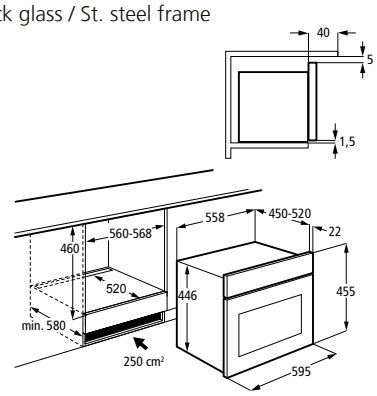


# DRAWER

*Accessorie*

## WARMING DRAWER

## GFCWDIX

***Performance and features***

15 cm drawer
6 dish servings/settings
20 dinner plates (ø 28 cm)
Useful height 10 cm
Adjustable thermostat 30°-70° C
Max power 430 W

***Safety***

Thermal protection at 110° C
Illuminated On/Off switch

***Details***

St. steel drawer cavity
Push-pull opening system

**WARMING DRAWER**

**GFCWDIX**
Black / St. steel frame

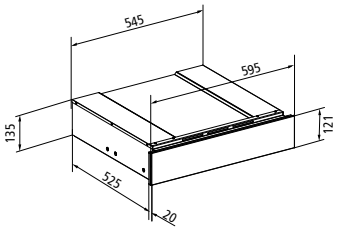

## TIMER

*The Timer function allows you to program the cooking time: when the period of time elapses, the burner turns off automatically.*

## BOOSTER

*When you need to save time and get cooking faster, you can use the booster function. It gives you an extra burst of energy that quickly heats your pan, and its contents, to the highest temperatures. It's perfect when you need to cook faster.*

## OVERFLOW SAFETY DEVICE

*The hob switches off automatically when any water or other liquid overflows.*

## EASY TO CLEAN

*Induction hobs do not convey heat so any spilled or overflowed liquid does not adhere to the surface and can be removed easily with a simple sponge.*

# INDUCTION HOBS, CONTROLLED POWER

### POWER AND CONTROL

*The cooktop itself produces electromagnetic vibrations, which induce the pot or pan to generate its own heat. The results are shorter heat-up times, greater precision and a safer cooking surface.*

### PROTECTION AGAINST BURNS

*Induction does not heat outside the pot space. The heat generated by the pot during use of the hob is not transmitted to the surface around the cooking area. There is also a warning light that indicates residual heat so you know when the area under the pot has cooled down to a safe temperature (< 60° C).*

### AUTOMATIC STOP

*It activates automatically if the user forgets to turn off the heating element after cooking. In case there are no power variation within a limited period of time, the heating zone will switch off automatically.*

### AUTOMATIC TEMPERATURES

*Three preset cooking temperatures, allow automatic preparation of a wide range of dishes. After selecting the most suitable cooking temperature (40° - 70° - 90°), you have the possibility to move freely without giving particular attention to the cooking, because a temperature sensor controls and maintains stable the cooking temperature. In this way you will optimize energy consumption with a great cooking result.*

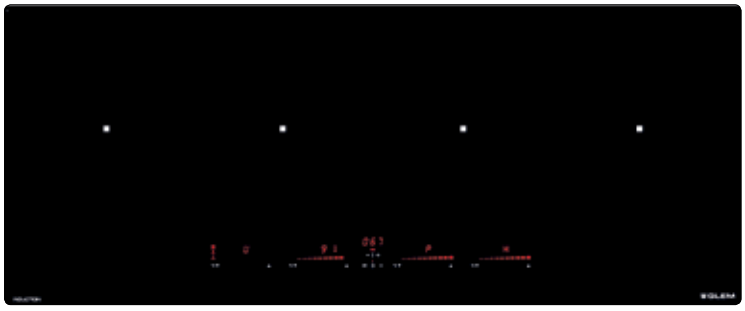

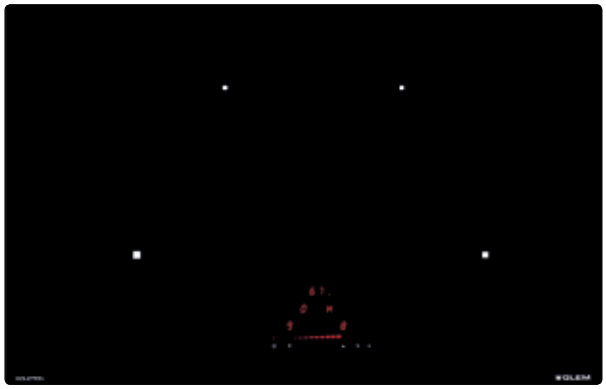

## GTIP14BK

***Performance and features***

100 cm induction hob
4 zones
- left Ø 210 mm - 2900 / 3700 W
- central left Ø 210 mm - 2900 / 3700 W
- central right  Ø 210 mm - 2900 / 3700 W
- right Ø 210 mm - 2900 / 3700 W
Total power: 7.400 W
9 power levels
4 slider touch controls
Timer

***Functions***

Booster
3 automatic temperatures
Heat up function: cooking programme featuring temporary booster

***Safety***

Child safety lock
Automatic temperatures
Residual heat indicator
Overflow safety device
Pot diameter detector
Automatic stop

**GTIP14BK**
Black ceramic glass

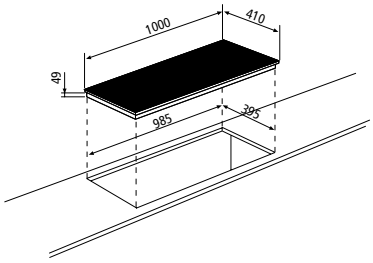


## GTIP84BK

***Performance and features***

80 cm induction hob
4 zones
- front left Ø 280 mm - 2600 / 3700 W
- rear left Ø 180 mm - 2300 / 3000 W
- front right Ø  210 mm - 2600 / 3700 W
- rear right Ø 180 mm - 2300 / 3000 W
Total power: 7.400 W
9 power levels
1 slider touch control
Timer

***Functions***

Booster
2 automatic temperatures
Heat up function: cooking programme featuring temporary booster

***Safety***

Child safety lock
Automatic temperatures
Residual heat indicator
Overflow safety device
Pot diameter detector
Automatic stop

**GTIP84BK**
Black ceramic glass

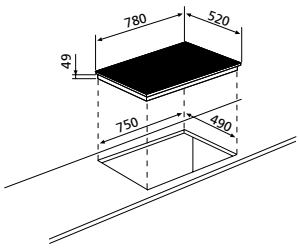

## GTI642

***Performance and features***

60 cm induction hob
4 zones
- front left Ø 190 mm - 1400 / 2000 W
- rear left Ø 160 mm - 1200 / 1400 W
- front right Ø 160 mm - 1200 / 1400 W
- rear right Ø 200 mm - 2300 / 3000 W
Total power: 7.100 W
9 power levels
Touch control
Timer

***Functions***

Booster

***Safety***

Child safety lock
Residual heat indicator
Overflow safety device
Pot diameter detector
Automatic stop

**GTI642**
Black ceramic glass

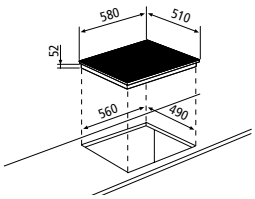

## GTI632

***Performance and features***

60 cm induction hob
3 zones
- front left Ø 190 mm - 1400 / 2000 W
- rear left Ø 160 mm - 1200 / 1400 W
- rear right Ø 250 mm - 2300 / 3000 W
Total power: 6.400 W
9 power levels
Touch control
Timer

***Functions***

Booster

***Safety***

Child safety lock
Residual heat indicator
Overflow safety device
Pot diameter detector
Automatic stop

**GTI632**
Black ceramic glass

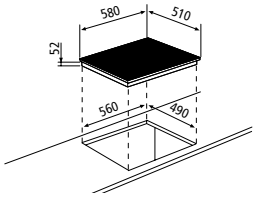

## HEAT UP

*The heat up function allows to set the maximum temperature for a limited period of time on the selected cooking zone, then the temperature decreases down to the lower selected value.*

## TIMER

*The Timer function allows you to program the cooking time: when the period of time elapses, the burner turns off automatically.*

## CERAMIC HOBS

# *The* SOPHISTICATED COOKING

### CHILDREN SAFETY LOCK

*This device disables the functions of the hob immediately, preventing a child from adjusting or changing the control settings.*

### OVERFLOW SAFETY DEVICE

*The hob switches off automatically when any water or other liquid overflows.*

### AUTOMATIC STOP

*It activates automatically if the user forgets to turn off the heating element after cooking. In case there are no power variation within a limited period of time, the heating zone will switch off automatically.*

### RESIDUAL HEAT INDICATOR

*All of Glem's glass ceramic hobs have a residual heat indicator. When the hob is turned off, the warning light stays on until the hob has cooled down to below 60 °C, in the interest of added safety.*

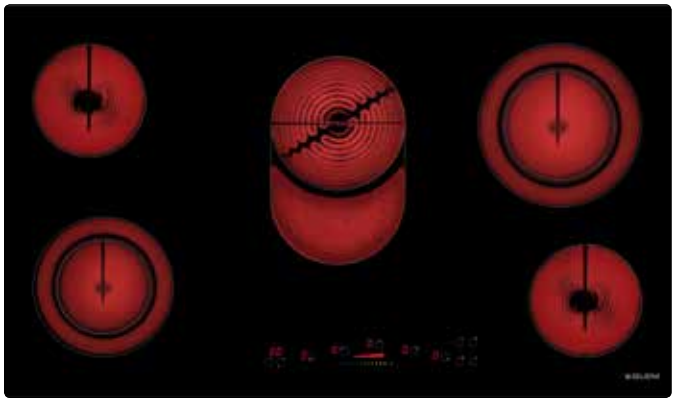

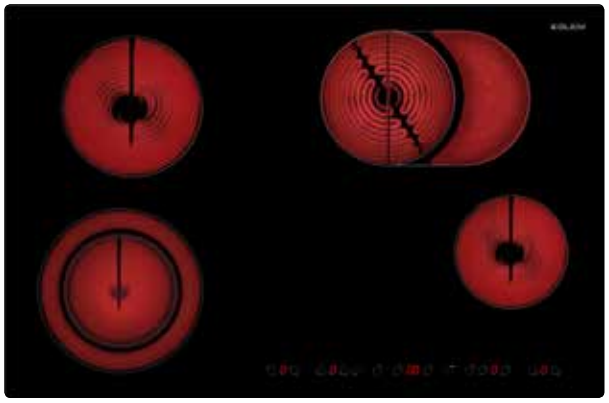

## GTH96T

***Performance and features***

90 cm ceramic hob
5 high-light zones (with 2 dual - 1 extensible hotplates)
Total power: 8.500 W
9 power levels
Slider Touch controls
Timer

***Safety***

Child safety lock
Residual heat indicator
Overflow safety device
Automatic stop

**GTH96T**
Black

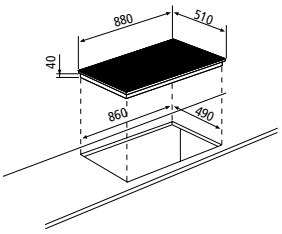


## GTH75TC

***Performance and features***

75 cm ceramic hob
4 high-light zones (with 1 dual - 1 extensible hotplates)
Total power: 7.600 W
9 power levels
Touch controls
Timer

***Safety***

Child safety lock
Residual heat indicator
Overflow safety device
Automatic stop

**GTH75TC**
Black

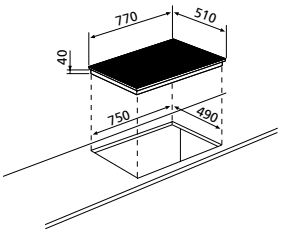

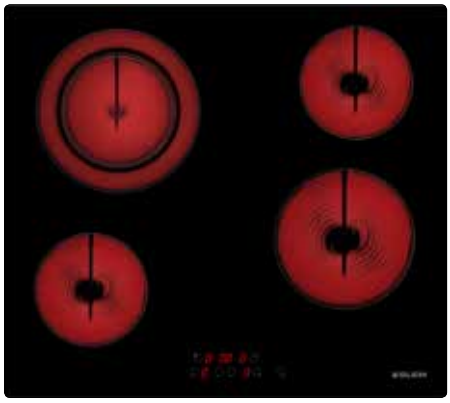

## GTH64TF

***Performance and features***

60 cm ceramic hob
4 high-light zones (with 1 dual)
Total power: 6.400 W
9 power levels
Touch controls
Timer

***Safety***

Child safety lock
Residual heat indicator
Overflow safety device
Automatic stop

**GTH64TF**
Black

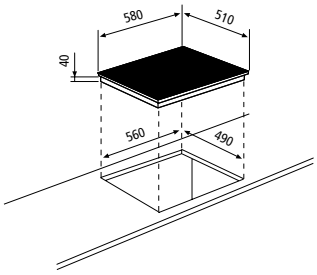


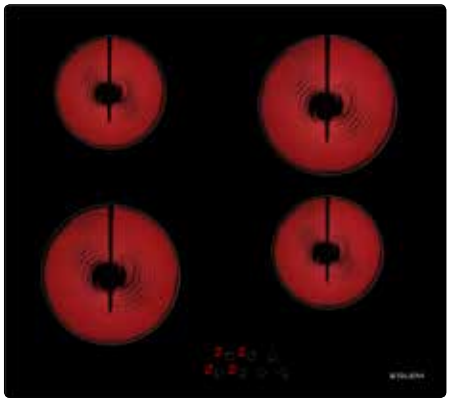

## GTH64TC

***Performance and features***

60 cm ceramic hob
4 high-light zones
Total power: 6.000 W
9 power levels
Touch controls

***Safety***

Child safety lock
Residual heat indicator
Overflow safety device
Automatic stop

**GTH64TC**
Black

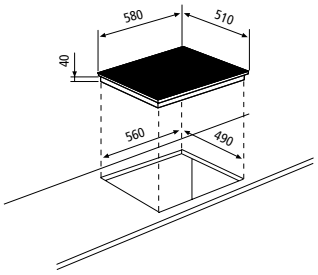

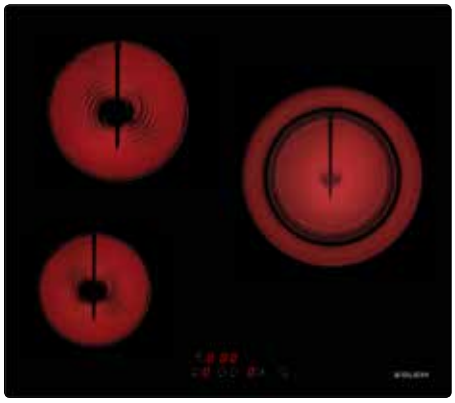

## GTH63TBK

***Performance and features***
3 high-light zones (with 1 extensible hotplate):
to achieve a fast heat up time
Total power: 5.400 W
9 power levels
Touch controls
Timer

***Function***
Heat up function: cooking program featuring temporary booster

***Safety***
Child safety lock
Residual heat indicator
Overflow safety device
Automatic stop

**GTH63TBK**
Black

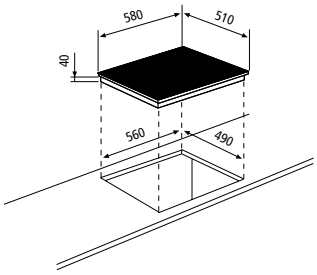

GLEM

# CRYSTAL GAS HOBS

# PURITY *of* GLASS

### TRIPLE RING BURNER

*The special burner with triple ring makes the most out of the power. The special shape of the burner permits uniformity of the flame. The power of 3.3 kW to 3.8 kW ensures maximum efficiency and faster cooking times.*

### ONE-HAND IGNITION

*The one-hand ignition allows to ignite the hob through an easy pression of the knob.*

### CAST IRON PAN SUPPORT

*Cast Iron is a very heat-resistant material that makes hobs long-lasting and similar to the professional ones, from an aesthetical point of view as well as from a functional one. They have been designed with particular attention to safety so that pans of any dimension can be put on them without falling over.*

## GV955BK

***Performance and features***

90 cm Crystal gas hob
5 gas burners
Total power: 10.800 W
1 Powerful Wok burner: 3.500 W

***Functions***

One-hand electronic ignition

***Safety***

Flame failure device (FFD)

***Details***

5 singles rounds enamelled pan support

3500 W

**GV955BK**
Black glass

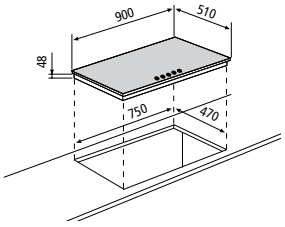


Standard cut-out size

## GV755BK

***Performance and features***

70 cm Crystal gas hob
5 gas burners
Total power: 7.300 W
1 Powerful Wok burner: 3.500 W

***Functions***

One-hand electronic ignition

***Safety***

Flame failure device (FFD)

***Details***

5 singles rounds enamelled pan support

3500 W

**GV755BK**
Black glass

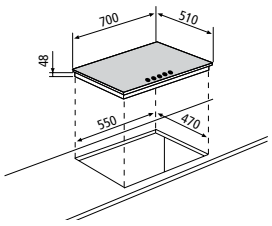


Standard cut-out size

## GV64BK

***Performance and features***

60 cm Crystal gas hob
4 gas burners
Total power: 7.300 W

***Functions***

One-hand electronic ignition

***Safety***

Flame failure device (FFD)

***Details***

4 singles rounds enamelled pan support

**GV64BK**
Black glass

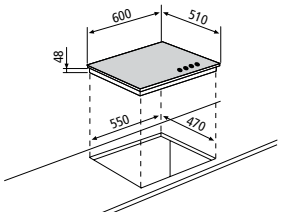

## GVP635HBK

***Performance and features***

60 cm Crystal gas hob
3 gas burners
Total power: 6.150 W
1 Powerful Wok burner: 3.500 W

***Functions***

One-hand electronic ignition

***Safety***

Flame failure device (FFD)

***Details***

3 singles rounds cast iron pan supports

**GVP635HBK**
Black glass

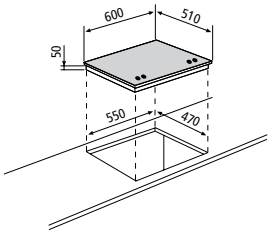

# GAS HOBS

# THINK *and then* COOK

### DUAL BURNER WITH DUAL CONTROL

*This powerful burner allows you to cook any food in the best possible manner and in the best possible time. The dual control means you can adjust the flame for each individual ring at a power of between 0.8 kW and 4.5 kW. It is therefore possible to turn on the central ring or the dual outer ring, or both: for large and small pans, concentrating the heat and energy only where it is needed.*

### TRIPLE RING BURNER

*The special burner with triple ring makes the most out of the power. The special shape of the burner permits uniformity of the flame. The power of 3.3 kW to 3.8 kW ensures maximum efficiency and faster cooking times.*

### ONE-HAND IGNITION

*The one-hand ignition allows to ignite the hob through an easy pression of the knob.*

### CAST IRON PAN SUPPORT

*Cast Iron is a very heat-resistant material that makes hobs long-lasting and similar to the professional ones. They have been designed with particular attention to safety so that pans of any dimension can be placed them without falling over.*

## GT951HIX

***Performance and features***

90 cm gas hob
5 gas burners
1 Dual Wok burner: 800-4.500 W
Total power: 12.000 W
One-hand electronic ignition
Flame failure device (FFD)

***Details***

Cast iron pan supports
Dedicated Dual Wok area with 2 knobs control

## GT955HIX

***Performance and features***

90 cm gas hob
5 gas burners
1 Wok burner: 3.800 W
Total power: 11.300 W
One-hand electronic ignition
Flame failure device (FFD)

***Details***

Cast iron pan supports

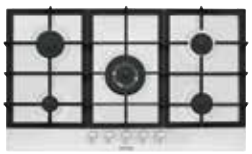

GT955HWH

GT955HBK

4500 W

**GT951HIX (FFD)**
St. steel

3800 W

**GT955HIX (FFD)**
St. steel

**GT955HWH (FFD)**
White

**GT955HBK (FFD)**
Black

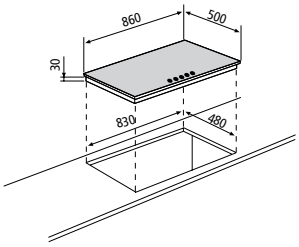


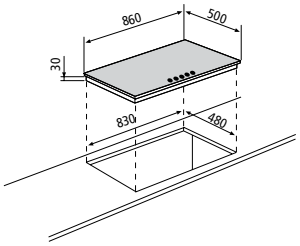

## GT955IX

***Performance and features***

90 cm gas hob
5 gas burners
1 Wok burner: 3.800 W
Total power: 11.300 W
One-hand electronic ignition
Flame failure device (FFD)

***Details***

Matt enamelled pan supports
Also available without FFD

GT955WH - GT955NWH

GT955BK - GT955NBK

## GT96NIX

***Performance and features***

90 cm gas hob
6 gas burners
Total power: 12.250 W
One-hand electronic ignition

***Details***

Matt enamelled pan supports

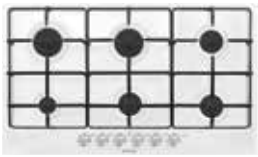

GT96NWH

GT96NBK

3800 W

**GT955IX (FFD)**
St. steel

**GT955WH (FFD)**
White

**GT955BK (FFD)**
Black

**Without FFD**

3800 W

**GT955NIX**
St. steel

**GT955NWH**
White

**GT955NBK**
Black

**Without FFD**

**GT96NIX**
St. steel

**GT96NWH**
White

**GT96NBK**
Black

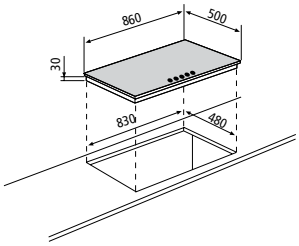


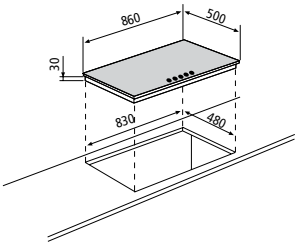

## GT968NIX

***Performance and features***

90 cm gas hob
4 gas burners + 2 hot plates
Total electrical power: 3.500 W
Total gas power: 7.500 W
One-hand electronic ignition

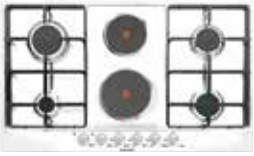

GT968NWH

***Details***

Matt enamelled pan supports

GT968NBK

## GTL955IX

***Performance and features***

90 cm gas hob
5 gas burners
1 Wok burner: 3.300 W
Total gas power: 10.800 W
One-hand electronic ignition
Flame failure device (FFD)

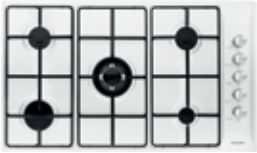

GTL955WH - GTL955NWH

***Details***

Matt enamelled pan supports
Also available without FFD

GTL955BK - GTL955NBK

**Without FFD**

**GT968NIX**
St. steel

**GT968NWH**
White

**GT968NBK**
Black

3300 W

**GTL955IX (FFD)**
St. steel

**GTL955WH (FFD)**
White

**GTL955BK (FFD)**
Black

**Without FFD**

3300 W

**GTL955NIX**
St. steel

**GTL955NWH**
White

**GTL955NBK**
Black

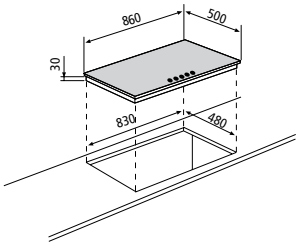


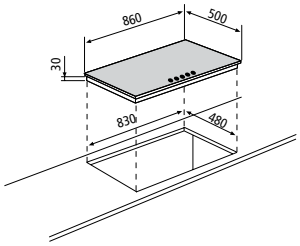

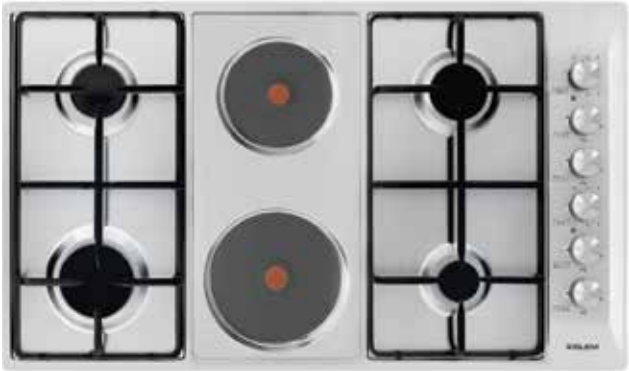

## GTL968IX

***Performance and features***

90 cm gas hob
4 gas burners + 2 hot plates
Total electrical power: 3.500 W
Total gas power: 7.500 W
One-hand electronic ignition
Flame failure device (FFD)

***Details***

Matt enamelled pan supports
Also available without FFD

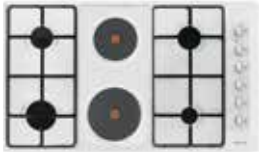

GTL968WH - GTL968NWH

GTL968BK - GTL968NBK

## GTS51HIX

***Performance and features***

75 cm semi-flush gas hob
5 gas burners
1 Dual Wok burner: 800-4.500 W
Total power: 12.000 W
One-hand electronic ignition
Flame failure device (FFD)

***Details***

Cast iron pan supports
Dedicated Dual Wok area with 2 knobs control

**GTL968IX (FFD)**
St. steel

**GTL968WH (FFD)**
White

**GTL968BK (FFD)**
Black

**Without FFD**

**GTL968NIX**
St. steel

**GTL968NWH**
White

**GTL968NBK**
Black

4500 W

**GTS51HIX (FFD)**
St. steel

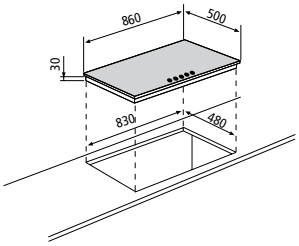


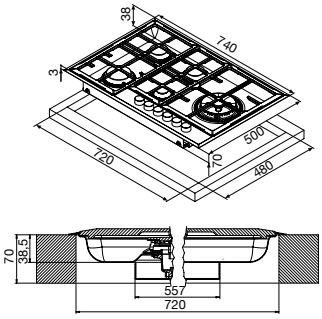

## GT851HIX

***Performance and features***

75 cm gas hob
5 gas burners
1 Dual Wok burner: 800-4.500 W
Total power: 12.000 W
One-hand electronic ignition
Flame failure device (FFD)

***Details***

Cast iron pan supports
Dedicated Dual Wok area with 2 knobs control

4500 W

**GT851HIX (FFD)**
St. steel

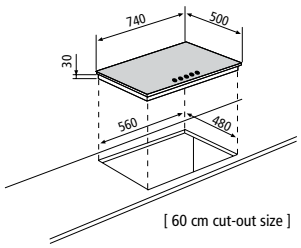


[ 60 cm cut-out size ]

## GT842HIX

***Performance and features***

75 cm gas hob
4 gas burners
1 Dual Wok burner: 800-4.500 W
1 Wok burner: 3.300 W
Total power: 10.550 W
One-hand electronic ignition
Flame failure device (FFD)

***Details***

Cast iron pan supports
Dedicated Dual Wok area with 2 knobs control

4500 W 3300 W

**GT842HIX (FFD)**
St. steel

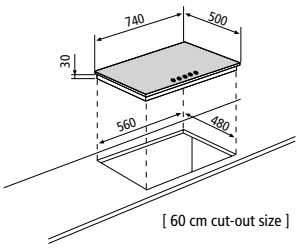


[ 60 cm cut-out size ]

## GT871HIX

***Performance and features***

75 cm gas hob
5 gas burners
1 Dual Wok burner: 800-4.500 W
Total power: 12.000 W
One-hand electronic ignition
Flame failure device (FFD)

***Details***

Cast iron pan supports
Dedicated Dual Wok area with 2 knobs control

4500 W

**GT871HIX (FFD)**
St. steel

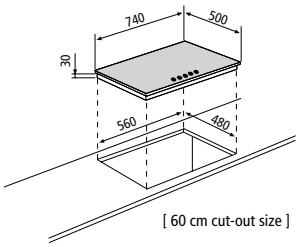


[ 60 cm cut-out size ]

## GT755HIX

***Performance and features***

70 cm gas hob
5 gas burners
1 Wok burner: 3.300 W
Total power: 10.800 W
One-hand electronic ignition
Flame failure device (FFD)

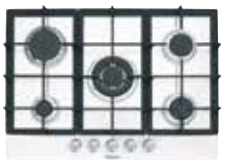

GT755HWH

***Details***

Cast iron pan supports

GT755HBK

3300 W

**GT755HIX (FFD)**
St. steel

**GT755HWH (FFD)**
White

**GT755HBK (FFD)**
Black

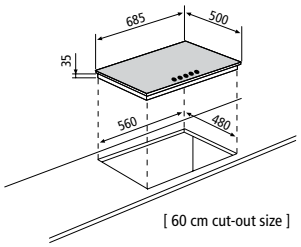


[ 60 cm cut-out size ]

## GT755IX

***Performance and features***

70 cm gas hob
5 gas burners
1 Wok burner: 3.300 W
Total power: 10.800 W
One-hand electronic ignition
Flame failure device (FFD)

***Details***

Matt enamelled pan supports
Also available without FFD

GT755WH - GT755NWH

GT755BK - GT755NBK

## GT731IX

***Performance and features***

70 cm gas hob
3 gas burners
1 Dual Wok burner: 800-4.500 W
Total power: 8.000 W
One-hand electronic ignition
Flame failure device (FFD)

***Details***

Matt enamelled pan supports
Dedicated Dual Wok area with 2 knobs control
Also available without FFD

3300 W

**GT755IX (FFD)**
St. steel

**GT755WH (FFD)**
White

**GT755BK (FFD)**
Black

**Without FFD**

3300 W

**GT755NIX**
St. steel

**GT755NWH**
White

**GT755NBK**
Black

4500 W

**GT731IX (FFD)**
St. steel

**Without FFD**

4500 W

**GT731NIX**
St. steel

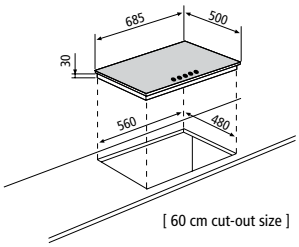


[ 60 cm cut-out size ]

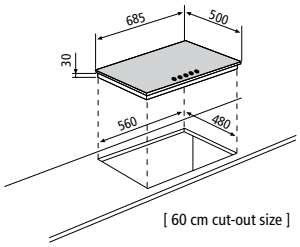


[ 60 cm cut-out size ]

## GT685HIX

***Performance and features***

60 cm gas hob
4 gas burners
1 Wok burner: 3.300 W
Total power: 8.300 W
One-hand electronic ignition
Flame failure device (FFD)

GT685HWH

***Details***

Cast iron pan supports

GT685HBK

## GT64HIX

***Performance and features***

60 cm gas hob
4 gas burners
Total power: 7.500 W
One-hand electronic ignition
Flame failure device (FFD)

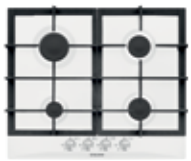

GT64HWH

***Details***

Cast iron pan supports

GT64HBK

**GT685HIX (FFD)**
St. steel

**GT685HWH (FFD)**
White

**GT685HBK (FFD)**
Black

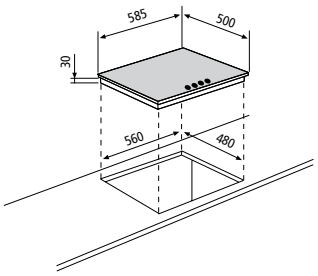

**GT64HIX (FFD)**
St. steel

**GT64HWH (FFD)**
White

**GT64HBK (FFD)**
Black

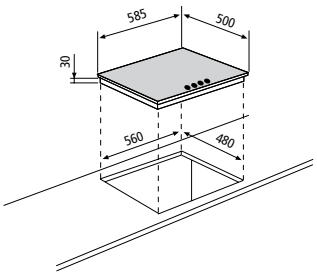

## GT64IX

***Performance and features***

60 cm gas hob
4 gas burners
Total power: 7.500 W
One-hand electronic ignition
Flame failure device (FFD)

GT64WH - GT64NWH

***Details***

Matt enamelled pan supports
Also available without FFD

GT64BK - GT64NBK

## GT685IX

***Performance and features***

60 cm gas hob
4 gas burners
1 Wok burner: 3.300 W
Total power: 8.300 W
One-hand electronic ignition
Flame failure device (FFD)

GT685WH - GT685NWH

***Details***

Matt enamelled pan supports
Also available without FFD

GT685BK - GT685NBK

**GT64IX (FFD)**
St. steel

**GT64WH (FFD)**
White

**GT64BK (FFD)**
Black

**Without FFD**

**GT64NIX**
St. steel

**GT64NWH**
White

**GT64NBK**
Black

**GT685IX (FFD)**
St. steel

**GT685WH (FFD)**
White

**GT685BK (FFD)**
Black

**Without FFD**

**GT685NIX**
St. steel

**GT685NWH**
White

**GT685NBK**
Black

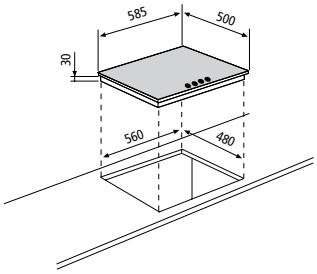


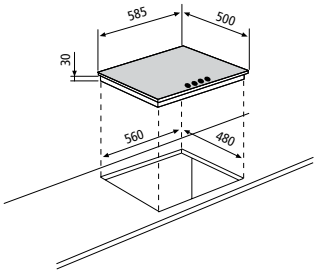

## GT645IX

***Performance and features***

60 cm gas hob
4 gas burners
1 Wok burner: 3.300 W
Total power: 9.050 W
One-hand electronic ignition
Flame failure device (FFD)

***Details***

Matt enamelled pan supports

## GT647IX

***Performance and features***

60 cm gas hob
3 gas burners + 1 hot plate
Total power: 7.250 W
One-hand electronic ignition
Flame failure device (FFD)

***Details***

Matt enamelled pan supports
Also available without FFD

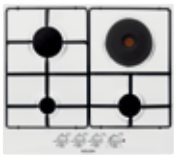

GT647WH - GT647NWH

GT647BK - GT647NBK

3800 W

**GT645IX (FFD)**
St. steel

**GT647IX (FFD)**
St. steel

**GT647WH (FFD)**
White

**GT647BK (FFD)**
Black

**Without FFD**

**GT647NIX**
St. steel

**GT647NWH**
White

**GT647NBK**
Black

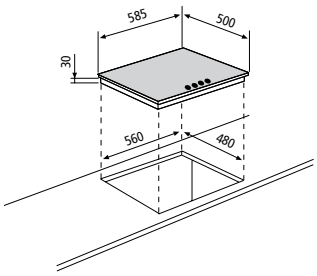


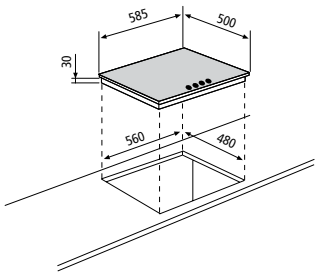

# GAS HOBS

## GTL64IX

***Performance and features***

60 cm gas hob
4 gas burners
Total power: 7.500 W
One-hand electronic ignition
Flame failure device (FFD)

***Details***

Matt enamelled pan supports
Also available without FFD

GTL64WH - GTL64NWH

GTL64BK - GTL64NBK

## GTL647IX

***Performance and features***

60 cm gas hob
3 gas burners + 1 hot plate
Total power: 7.250 W
One-hand electronic ignition
Flame failure device (FFD)

***Details***

Matt enamelled pan supports
Also available without FFD

GTL647WH - GTL647NWH

**GTL64IX (FFD)**
St. steel

**GTL64WH (FFD)**
White

**GTL64BK (FFD)**
Black

**Without FFD**

**GTL64NIX**
St. steel

**GTL64NWH**
White

**GTL64NBK**
Black

**GTL647IX**
St. steel

**GTL647WH**
White

**Without FFD**

**GTL647NIX**
St. steel

**GTL647NWH**
White

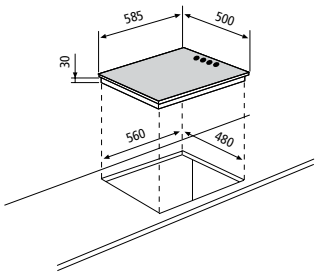


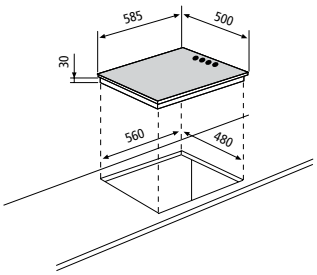

## GTL640IX

***Performance and features***

60 cm electric hob
4 hot plates
Total power: 6.000 W

GTL640WH

**GTL640IX**
St. steel

**GTL640WH**
White

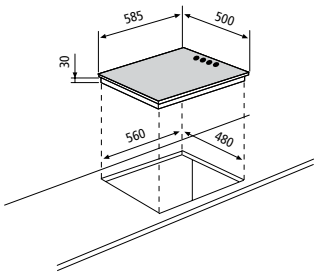

DOMINO HOBS

# *Your* TAILOR MADE LAYOUT

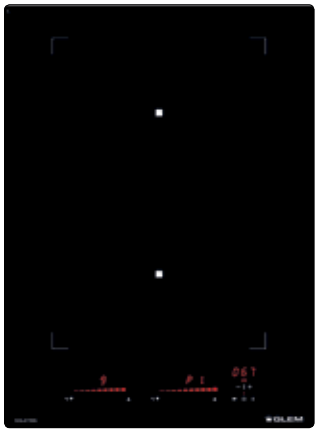

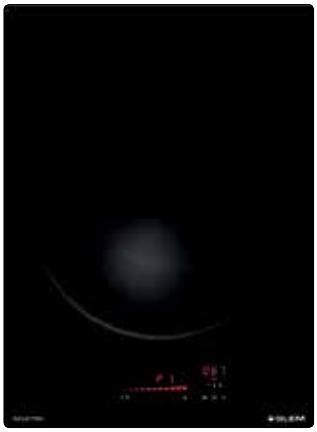

## GTIP42BK

***Performance and features***

38 cm wide – Induction Domino
2 zones
Total power: 3.700 W
9 power levels
2 sliders touch controls
Timer

***Functions***

Booster: to increase the power of any cooking zone up to 75%
3 automatic temperatures
Heat up function: cooking programme featuring temporary booster
Bridge function: allows two heating zones to be controlled and treated as one

***Safety***

Child safety lock
Residual heat indicator
Overflow safety device
Pot diameter detector
Automatic stop

## GTIPW41BK

***Performance and features***

38 cm wide – Wok Domino
1 Wok burner: 3.000 W
9 power levels
1 slider touch control
Timer

***Functions***

Booster: to increase the power of any cooking zone up to 75%
3 automatic temperatures
Heat up function: cooking programme featuring temporary booster

***Safety***

Child safety lock
Residual heat indicator
Overflow safety device
Pot diameter detector
Automatic stop

**GTIP42BK**
Black ceramic glass

**GTIPW41BK**
Black ceramic glass

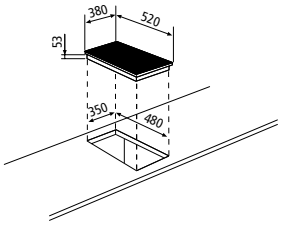


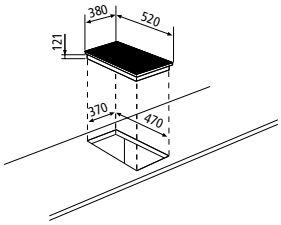

## GTPN42BK

***Performance and features***

38 cm wide – Teppanyaki induction Domino
2 indipendent thermostatically controlled cooking areas
Total power: 2.800 W
9 power levels
Slider touch controls
2 timers (1 for egg cooking)
Digital clock

***Functions***

Temperature regulator between 50° and 220°
Memory
Bridge function: allows two heating zones to be controlled and treated as one

***Safety***

Child safety lock
Residual heat indicator
Overflow safety device
Over temperature cut-off
Automatic stop

***Details***

Full glass control panel

**GTPN42BK**
St. steel grill plate

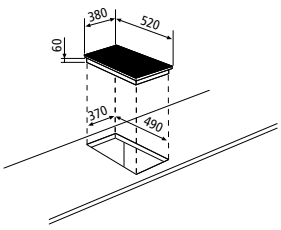


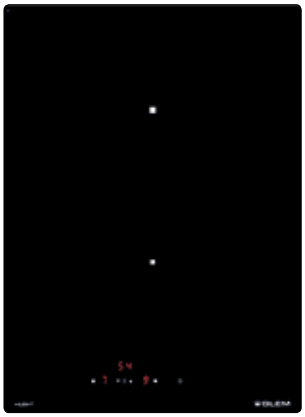

## GTHP42BK

***Performance and features***

38 cm wide – Ceramic Domino
2 high-light zones: to achieve a fast heat up time
Total power: 3.000 W
9 power levels
Digital controls
Digital clock
2 Timers (1 for the egg cooking)

***Functions***

Automatic cooking
Booster: to increase the power of any cooking zone up to 75%

***Safety***

Child safety lock
Residual heat indicator
Over temperature cut-off
Overflow safety device
Automatic stop

**GTHP42BK**
Black ceramic glass

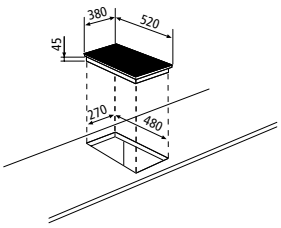

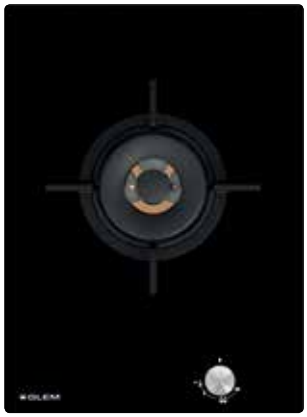

## GVP415HBK

***Performance and features***

38 cm wide – High power Ceramic Domino gas
1 Powerful Wok: 5.000 W

***Functions***

One-hand electronic ignition

***Safety***

Flame failure device (FFD)

***Details***

Single round cast iron pan support
Wok support

**GVP415HBK**
Black ceramic glass

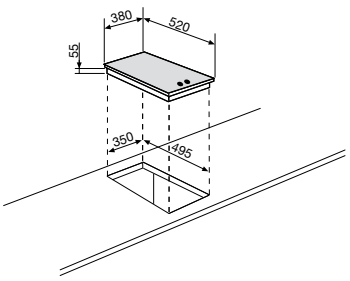

## GVP42HBK

***Performance and features***

38 cm wide – Ceramic Domino gas
2 gas burners
Total power: 4.000 W

***Functions***

One-hand electronic ignition

***Safety***

Flame failure device (FFD)

***Details***

2 Singles rounds cast iron pan supports
Wok support

**GVP42HBK**
Black ceramic glass

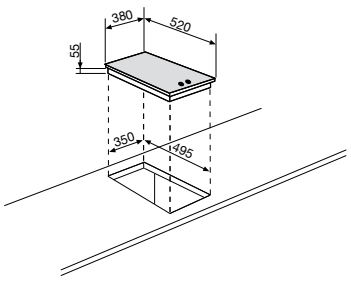

## GT415HIX

***Performance and features***

37 cm wide – Domino gas
1 Powerful Wok: 3.800 W
One-hand electronic ignition
Flame failure device (FFD)

***Details***

Cast iron pan support

**GT415HIX**
St. steel

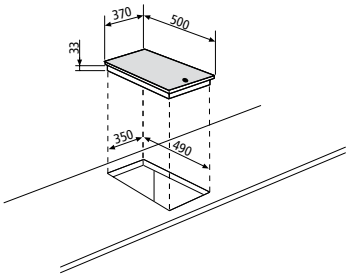


## GT42HIX

***Performance and features***

37 cm wide – Domino gas
2 gas burners
Total power: 4.000 W
One-hand electronic ignition
Flame failure device (FFD)

***Details***

Cast iron pan support

**GT42HIX**
St. steel

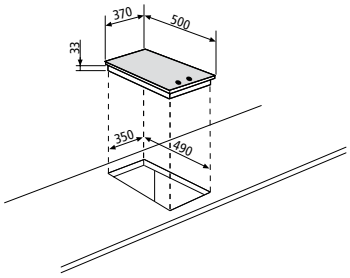

## GTI322

***Performance and features***

30 cm wide – Induction Domino
2 zones
- front left Ø 160 mm - 1400 W
- rear left Ø 200 mm - 1400 / 2000 W
Total power: 3.400 W
9 power levels
Touch controls
Timer

***Functions***

Booster

***Safety***

Child safety lock
Residual heat indicator
Overflow safety device
Pot diameter detector
Automatic stop

**GTI322**
Black ceramic glass

## GTH32K

***Performance and features***

30 cm wide – Ceramic Domino
2 high-light zones
Total power: 3.000 W
6 power levels
Frontal knobs controls

***Safety***

Residual heat indicator

**GTH32K**
Black ceramic glass

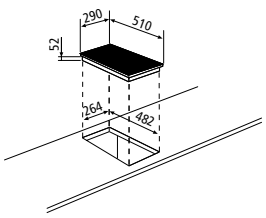


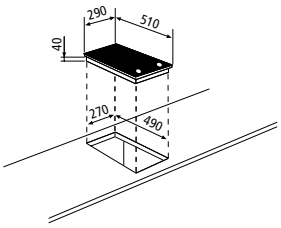

## GT32IX

***Performance and features***

30 cm wide – Domino gas
2 gas burners
Total power: 4.000 W
One-hand electronic ignition
Flame failure device (FFD)

***Details***

Matt enamelled pan supports
Also available without FFD

**GT32IX (FFD)**
St. steel

**Without FFD**

**GT32NIX**
St. steel

## GT320IX

***Performance and features***

30 cm wide – Domino electric
2 hot plates
Total power: 3.500 W
Power on indicator

**GT320IX**
St. steel

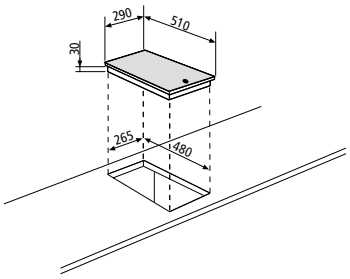


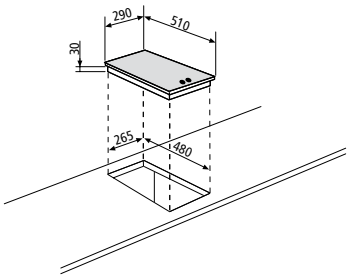

## GT3BIX

***Performance and features***

30 cm wide – Domino electric
Barbecue: 2.400 W
Power on indicator

***Details***

Enamelled pan support

30 cm

**GT3BIX**
St. steel

## GT3FIX

***Performance and features***

30 cm wide – Domino electric
Fryer: 2.300 W
Power on indicator

30 cm

**GT3FIX**
St. steel

## GTH32KIX

***Performance and features***

30 cm wide – Ceramic Domino electric
2 high-light zones
Total power: 3.000 W
Power on indicator

30 cm

**GTH32KIX**
St. steel

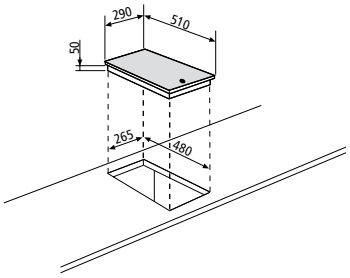


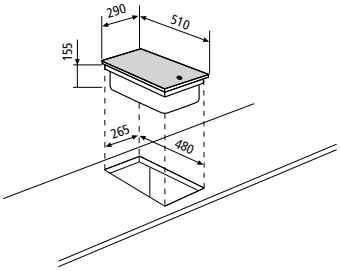


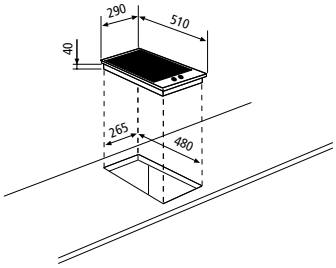

# HOODS

# POWER *and* SILENCE

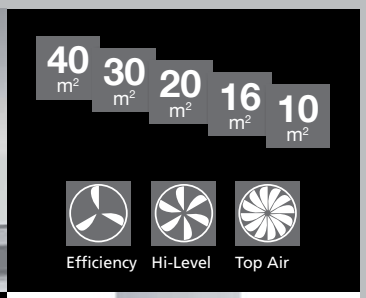


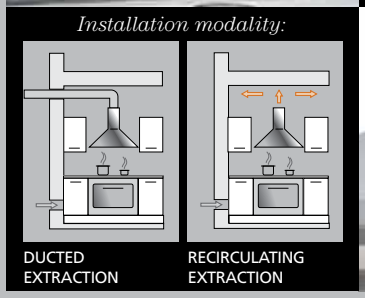

## PERIMETRAL ASPIRATION

*Thanks to the special restriction created, the perimeter extraction system generates an increase in air speed and reduces the quantity of fumes which escape beyond the hood's extraction rim. The stainless steel panels add prestige to the product for a more elegant, sophisticated look. The flat, smooth surface also makes the hood easier to clean.*

## POWER LEVEL (1 - 2 - 3)

*Glem offers a variety of extractor units so you can select the one best suited to your personal needs.*

## STYLE AND ELEGANCE

*Kitchens are all the more in harmony with the home, with efficient extractor systems that blend in with the design of the furniture. Glem presents a range of updated models with a suitable image and improved functionality that can fit in with any types of kitchen furniture; they can be installed under cabinets or independently on a wall. Made of stainless steel and glass, with sophisticated details, Glem hoods can add elegance to kitchen environments.*

## FILTERS

*There are two types of filter that optimize use of the hoods: a grease filter and an active carbon odour filter (provided as standard with Glem hoods). The grease filter comes in two types: metal or synthetic, and protects the motor by preventing grease in the cooking fumes from damaging it. The metal filter can be cleaned in the dishwasher. The odour filter is an active carbon filter that purifies the air before expelling it back into the kitchen environment.*

## SATURATION FILTER ALARM

*After 30 hours of operation, a flashing signal from the operating panel advises the user that is necessary to clean the anti-grease filters. Similarly, after 120 hours of use, a different flashing signal indicates that the carbon filters (wherever present) need to be replaced. The above noted procedures are fundamental in order to guarantee the maximum efficiency of the product.*

## GHIB98IX ISLAND HOOD

***Performance and features***

90 cm wide
Electronic controls
3 speeds + 1 intensive
4x20W halogen lamps
Aluminium grease filters
Carbon filters
Maximum extraction rate 700 $m^3/h$

***Functions***

Filters saturation alarm
Booster: 10' at full power to eliminate intense odours/steam

**GHIB98IX**
St. steel

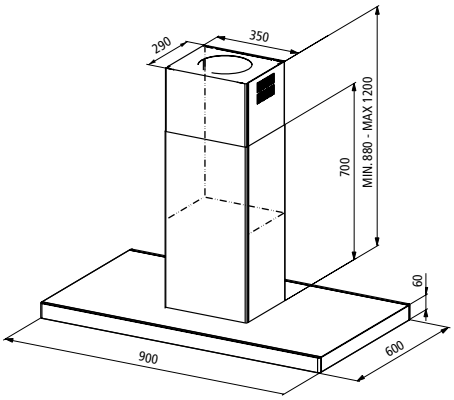

## GHS98IX WALL GLASS HOOD

***Performance and features***

90 cm wide
Electronic controls
2 speeds + 1 intensive
2x20W halogen lamps
Aluminium grease filters
Carbon filter
Maximum extraction rate 735 m³/h

***Functions***

Booster: 10' at full power to eliminate intense odours/steam

90 cm

**GHS98IX**
St. steel / glass

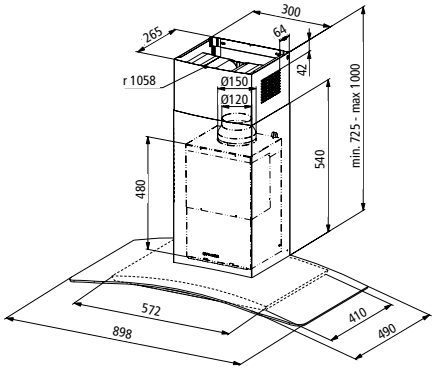


## GHS68IX WALL GLASS HOOD

***Performance and features***

60 cm wide
Electronic controls
2 speeds + 1 intensive
2x20W halogen lamps
Aluminium grease filters
Carbon filter
Maximum extraction rate 735 m³/h

***Functions***

Booster: 10' at full power to eliminate intense odours/steam

60 cm

**GHS68IX**
St.steel / glass

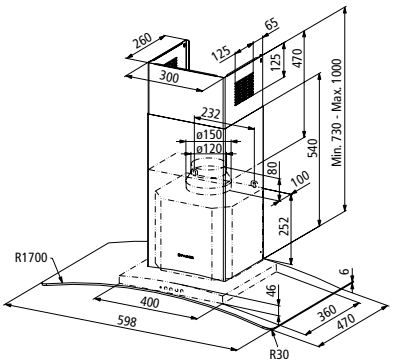

## GHR98IX WALL CURVED HOOD

***Performance and features***

90 cm wide
Electronic controls
2 speeds + 1 intensive
2x20W halogen lamps
Aluminium grease filters
Carbon filter
Maximum extraction rate 735 m³/h

***Functions***

Booster: 10’ at full power to eliminate intense odours/steam

90 cm

**GHR98IX**
St. steel

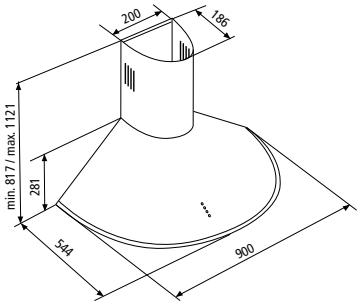


## GHB98IX WALL BOX HOOD

***Performance and features***

90 cm wide
Electronic controls
2 speeds + 1 intensive
2x20W halogen lamps
Aluminium grease filters
Carbon filter
Maximum extraction rate 735 m³/h

***Functions***

Booster: 10’ at full power to eliminate intense odours/steam

90 cm

**GHB98IX**
St. steel

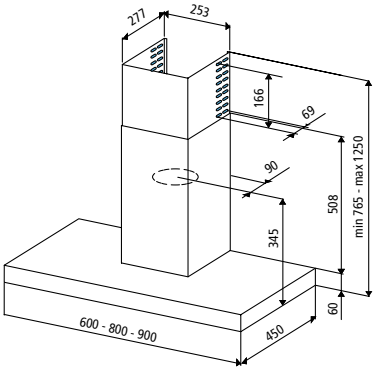

## GHP980IX WALL CHIMNEY HOOD

***Performance and features***

90 cm wide
Electronic soft touch controls
3 speeds + 1 intensive
2x20W halogen lamps
Aluminium grease filters
Carbon filter
Maximum extraction rate 725 m³/h

***Functions***

Delay timer
Filters saturation alarm
Booster: 6′ at full power to eliminate intense odours/steam

90 cm

**GHP980IX**
St. steel

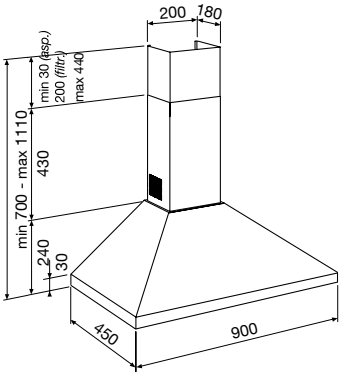


## GHP680IX WALL CHIMNEY HOOD

***Performance and features***

60 cm wide
Electronic soft touch controls
3 speeds + 1 intensive
2x20W halogen lamps
Aluminium grease filters
Carbon filter
Maximum extraction rate 725 m³/h

***Functions***

Delay timer
Filters saturation alarm
Booster: 6′ at full power to eliminate intense odours/steam

60 cm

**GHP680IX**
St. steel

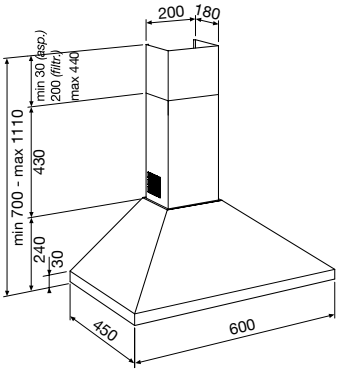

## GHP940IX WALL CHIMNEY HOOD

***Performance and features***

90 cm wide
Push buttons
3 speeds
2x28W halogen lamps
Aluminium grease filters
Carbon filter
Maximum extraction rate 420 m³/h

90 cm

**GHP940IX**
St. steel

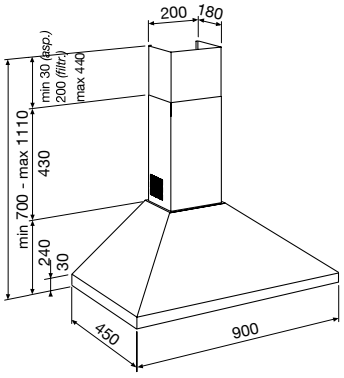


## GHP640IX WALL CHIMNEY HOOD

***Performance and features***

60 cm wide
Push buttons
3 speeds
2x28W halogen lamps
Aluminium grease filters
Carbon filter
Maximum extraction rate 420 m³/h

60 cm

**GHP640IX**
St. steel

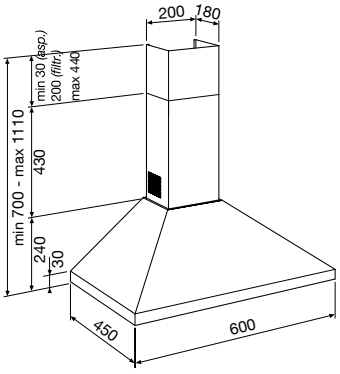

## GHC95IX

***Performance and features***

90 cm wide
Push buttons
3 speeds
2x28W halogen lamps
Aluminium grease filters
Carbon filter
Maximum extraction rate 360 m³/h

90 cm

**GHC95IX**
Full St. steel

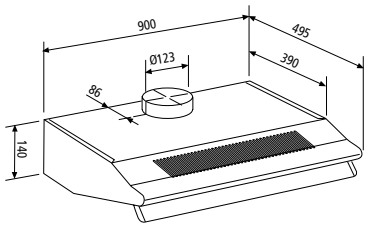


## GHC65IX

***Performance and features***

60 cm wide
Push buttons
3 speeds
2x28W halogen lamps
Metallic grease filters
Carbon filter
Maximum extraction rate 360 m³/h

60 cm

**GHC65IX**
Full St. steel

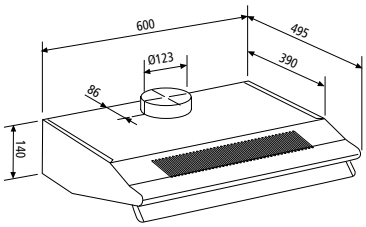

# HOODS

## GHE90SI - GHE60SI

***Performance and features***

90 - 60 cm wide
Slider controls
3 speeds
1x28W halogen lamps
Acrylic grease filters
Carbon filter
Maximum extraction rate 171 m³/h

90 cm

**GHE90SI**
Silver

60 cm

**GHE60SI**
Silver

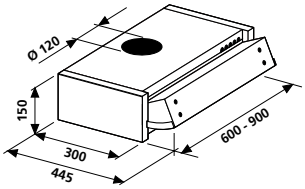

# TECHNICAL FEATURES OVENS

| | GFP16 | GFP13 | GFP93 | GFS93 | GFS53 | GFS92 |
|---|---|---|---|---|---|---|
| Collection | Contemporaneo | Contemporaneo | Contemporaneo | Stylish | Stylish | Stylish |
| Type | Multifunction | Multifunction | Multifunction | Multifunction | Multifunction | Multifunction |
| Colour | IX | IX | IX | IX | IX | IX |
| Supply | Electric | Electric | Electric | Electric | Electric | Electric |
| **FUNCTIONS** | | | | | | |
| Programs number | 13 | 11 | 9 | 9 | 5 | 9 |
| Light | - | - | - | - | - | - |
| Pizza | • | • | • | • | - | • |
| Pre-heating | - | • | • | • | - | • |
| Traditional cooking | • | • | • | • | • | • |
| Bottom element | - | • | - | - | • | - |
| Bottom element + fan | • | • | - | - | • | - |
| Upper element | • | - | - | - | - | - |
| Grill | • | • | • | • | - | • |
| Grill + upper element (double grill) | • | - | • | • | - | • |
| Double grill + fan | • | • | • | • | - | • |
| Double grill + turnspit | - | - | - | - | - | - |
| Double grill + fan + turnspit | - | - | - | - | - | - |
| Grill + fan | • | - | - | - | • | - |
| Grill + turnspit | - | - | - | - | - | - |
| Grill + fan + turnspit | - | - | - | - | - | - |
| Static + fan | • | • | • | • | • | • |
| Multifunction (circular + fan) | • | • | • | • | - | • |
| Defrosting | • | • | • | • | - | • |
| Upper element + fan | • | - | - | - | - | - |
| Turnspit | - | - | - | - | - | - |
| Gas | - | - | - | - | - | - |
| Grill Gas | - | - | - | - | - | - |
| Grill Gas + fan | - | - | - | - | - | - |
| Grill Gas + turnspit | - | - | - | - | - | - |
| Grill Gas + turnspit + fan | - | - | - | - | - | - |
| Gas + fan | - | - | - | - | - | - |
| Gas + turnspit | - | - | - | - | - | - |
| Gas + turnspit + fan | - | - | - | - | - | - |
| Low temp | • | • | - | - | - | - |
| **PROGRAMMING** | | | | | | |
| Clock-Oven Control System | Full touch electronic programmer | Full electronic programmer | Touch electronic programmer | Electronic programmer | Electronic programmer | Timer 120' end of cooking |
| Preset Temperature | • | • | - | - | - | - |
| **OVEN CAVITY** | | | | | | |
| Black enamel | - | - | - | - | - | - |
| Titanium enamel | • | • | • | • | • | • |
| **OVEN CAVITY EQUIPMENT** | | | | | | |
| n° grids | 1 | 1 | 1 | 1 | 1 | 1 |
| n° driptray | 2 | 2 | 2 | 2 | 1 | 2 |
| Turnspit | - | - | - | - | - | - |
| n° level with telescopic rails | 2 / partial extension | 2 / partial extension | 2 / partial extension | - | - | - |
| Other accessories | - | - | - | - | - | - |
| **TECHNICAL FEATURES** | | | | | | |
| Embossed | - | - | - | - | - | - |
| Smooth sides with chromed racks | • | • | • | • | • | • |
| n° door glass | 3 | 3 | 3 | 3 | 3 | 3 |
| Glass Door Type | Full glass flat | Full glass flat | Full glass flat | Full glass flat | Full glass flat | Full glass flat |
| Removable door glass | • | • | • | • | • | • |
| Cold door | • | • | • | • | • | • |
| Tangential cooling fan | • | • | • | • | • | • |
| Security gas valve | - | - | - | - | - | - |
| n° lamps | 1 x 25 W | 1 x 25 W | 1 x 25 W | 1 x 25 W | 1 x 25 W | 1 x 25 W |
| Net volume lt | 64 | 64 | 64 | 64 | 64 | 64 |
| Power W | 2.850 | 2.870 | 2.670 | 2.858 | 2.670 | 2.870 |
| Voltage/Frequency V/Hz | 220-240 / 50-60 | 220-240 / 50-60 | 220-240 / 50-60 | 220-240 / 50-60 | 220-240 / 50-60 | 220-240 / 50-60 |
| Efficiency energy class [1] | A | A | A | A | A | A |
| Energy consumption conventional [1] kWh/MJ | 0,88 | 0,88 | 0,88 | 0,88 | 0,88 | 0,88 |
| Energy consumption fan forced [1] kWh/MJ | 0,80 | 0,80 | 0,80 | 0,80 | 0,80 | 0,80 |
| **DIMENSIONS** | | | | | | |
| Product HxWxD mm | 590x597x543 | 590x597x543 | 590x597x543 | 590x597x543 | 590x597x543 | 590x597x543 |
| Built-in HxWxD mm | 583x554x564 | 583x554x564 | 583x554x564 | 583x554x564 | 583x554x564 | 583x554x564 |
| Package HxWxD mm | 700x640x640 | 700x640x640 | 700x640x640 | 700x640x640 | 700x640x640 | 700x640x640 |

[1] from January 2015, according to regulation 65/2014

Colours legend: BK= Black IX= St. steel WH= White

| | GFS52 | GFEA93 | GFE92 | GFE52 | GFEV | GFEW |
|---|---|---|---|---|---|---|
| Collection | Stylish | Excellence | Excellence | Excellence | Excellence | Excellence |
| Type | Multifunction | Multifunction | Multifunction | Multifunction | Gas fan assisted | Gas / Gas Grill |
| Colour | IX | IX | IX | IX | IX | IX |
| Supply | Electric | Electric | Electric | Electric | 21 (Natural gas G20) | 21 (Natural gas G20) |
| **FUNCTIONS** | | | | | | |
| Programs number | 5 | 9 | 9 | 5 | 6 | 7 |
| Light | - | - | - | - | • | • |
| Pizza | - | • | • | - | - | - |
| Pre-heating | - | • | • | - | - | - |
| Traditional cooking | • | • | • | • | - | - |
| Bottom element | • | - | - | • | - | - |
| Bottom element + fan | • | - | - | • | - | - |
| Upper element | - | - | - | - | - | - |
| Grill | - | • | • | - | - | - |
| Grill + upper element (double grill) | - | • | • | - | - | - |
| Double grill + fan | - | • | • | - | - | - |
| Double grill + turnspit | - | - | - | - | - | - |
| Double grill + fan + turnspit | - | - | - | - | - | - |
| Grill + fan | • | - | - | • | - | - |
| Grill + turnspit | - | - | - | - | • | • |
| Grill + fan + turnspit | - | - | - | - | • | - |
| Static + fan | • | • | • | • | - | - |
| Multifunction (circular + fan) | - | • | • | - | - | - |
| Defrosting | - | • | • | - | • | • |
| Upper element + fan | - | - | - | - | - | - |
| Turnspit | - | - | - | - | - | - |
| Gas | - | - | - | - | • | • |
| Grill Gas | - | - | - | - | - | • |
| Grill Gas + fan | - | - | - | - | - | - |
| Grill Gas + turnspit | - | - | - | - | - | - |
| Grill Gas + turnspit + fan | - | - | - | - | - | - |
| Gas + fan | - | - | - | - | - | • |
| Gas + turnspit | - | - | - | - | - | - |
| Gas + turnspit + fan | - | - | - | - | • | • |
| Low temp | - | - | - | - | - | - |
| **PROGRAMMING** | | | | | | |
| Clock-Oven Control System | Timer 120' end of cooking | Electronic programmer | Timer 120' end of cooking | Timer 120' end of cooking | Minute minder 60' | Minute minder 60' |
| Preset Temperature | - | - | - | - | - | - |
| **OVEN CAVITY** | | | | | | |
| Black enamel | - | - | - | - | - | - |
| Titanium enamel | • | • | • | • | • | • |
| **OVEN CAVITY EQUIPMENT** | | | | | | |
| n° grids | 1 | 2 | 1 | 1 | 1 | 1 |
| n° driptray | 1 | 1 | 1 | 1 | 1 | 1 |
| Turnspit | - | - | - | - | • | • |
| n° level with telescopic rails | - | - | - | - | - | - |
| Other accessories | - | - | - | - | - | - |
| **TECHNICAL FEATURES** | | | | | | |
| Embossed | - | - | - | - | - | - |
| Smooth sides with chromed racks | • | • | • | • | • | • |
| n° door glass | 3 | 3 | 3 | 3 | 3 | 3 |
| Glass Door Type | Full glass flat | Full glass flat | Full glass flat | Full glass flat | Full glass flat | Full glass flat |
| Removable door glass | • | - | - | - | - | - |
| Cold door | • | - | - | - | - | - |
| Tangential cooling fan | • | • | • | • | • | • |
| Security gas valve | - | - | - | - | • | • |
| n° lamps | 1 x 25 W | 1 x 25 W | 1 x 25 W | 1 x 25 W | 1 x 25 W | 1 x 25 W |
| Net volume lt | 64 | 64 | 64 | 64 | 63 | 60 |
| Power W | 2.670 | 2.868 | 2.868 | 2.868 | 1.350 | 54 |
| Voltage/Frequency V/Hz | 220-240 / 50-60 | 220-240 / 50-60 | 220-240 / 50-60 | 220-240 / 50-60 | 220-240 / 50-60 | 220-240 / 50-60 |
| Efficiency energy class [1] | A | A | A | A | A | A |
| Energy consumption conventional [1] kWh/MJ | 0,88 | 0,718 | 0,85 | 0,85 | 1,59 / 5,71 | 1,59 / 5,71 |
| Energy consumption fan forced [1] kWh/MJ | 0,80 | 0,98 | 0,80 | 0,80 | 1,77 / 6,37 | - |
| **DIMENSIONS** | | | | | | |
| Product HxWxD mm | 590x597x543 | 590x597x543 | 590x597x543 | 590x597x543 | 590x597x543 | 590x597x543 |
| Built-in HxWxD mm | 583x554x564 | 583/585x554/564x550 | 583/585x554/564x550 | 583/585x554/564x550 | 583/585x554/564x550 | 583/585x554/564x550 |
| Package HxWxD mm | 700x640x640 | 690x650x650 | 690x650x650 | 690x650x650 | 690x650x650 | 690x650x650 |

[1] from January 2015, according to regulation 65/2014

Colours legend: BK= Black IX= St. steel WH= White

# TECHNICAL FEATURES OVENS

| | GFEG | GFM52 | GFMF | GFMG | GF9W |
|---|---|---|---|---|---|
| Collection | Excellence | Metropol | Metropol | Metropol | Excellence |
| Type | Gas / Gas Grill | Multifunction | Static Gas/Electric Grill | Static Gas / Gas Grill | Gas / Gas Grill + fan |
| Colour | IX | IX - WH - BK | IX - WH - BK | WH - BK | IXN |
| Supply | 21 (Natural gas G20) | Electric | 21 (Natural gas G20) | 21 (Natural gas G20) | 21 (Natural gas G20) |
| **FUNCTIONS** | | | | | |
| Programs number | 5 | 5 | 5 | 5 | 10 |
| Light | • | - | • | • | • |
| Pizza | - | - | - | - | - |
| Pre-heating | - | - | - | - | - |
| Traditional cooking | - | • | - | - | - |
| Bottom element | - | • | - | - | - |
| Bottom element + fan | - | • | - | - | - |
| Upper element | - | - | - | - | - |
| Grill | - | - | • | - | - |
| Grill + upper element (double grill) | - | - | - | - | - |
| Double grill + fan | - | - | - | - | - |
| Double grill + turnspit | - | - | - | - | - |
| Double grill + fan + turnspit | - | - | - | - | - |
| Grill + fan | - | • | - | - | - |
| Grill + turnspit | - | - | • | - | - |
| Grill + fan + turnspit | - | - | - | - | - |
| Static + fan | - | • | - | - | - |
| Multifunction (circular + fan) | - | - | - | - | - |
| Defrosting | - | - | - | - | • |
| Upper element + fan | - | - | - | - | - |
| Turnspit | - | - | - | - | - |
| Gas | • | - | • | • | • |
| Grill Gas | • | - | - | • | • |
| Grill Gas + fan | - | - | - | - | • |
| Grill Gas + turnspit | • | - | - | • | • |
| Grill Gas + turnspit + fan | - | - | - | - | • |
| Gas + fan | - | - | - | - | • |
| Gas + turnspit | • | - | • | • | • |
| Gas + turnspit + fan | - | - | - | - | • |
| Low temp | - | - | - | - | - |
| **PROGRAMMING** | | | | | |
| Clock-Oven Control System | Minute minder 60’ | Timer 120’ end of cooking | Minute minder 60’ | Minute minder 60’ | Minute minder 60’ |
| Preset Temperature | - | - | - | - | - |
| **OVEN CAVITY** | | | | | |
| Black enamel | - | - | - | - | • |
| Titanium enamel | • | • | • | • | - |
| **OVEN CAVITY EQUIPMENT** | | | | | |
| n° grids | 1 | 1 | 1 | 1 | 2 |
| n° driptray | 1 | 1 | 1 | 1 | 1 |
| Turnspit | • | - | • | • | • |
| n° level with telescopic rails | - | - | - | - | - |
| Other accessories | - | - | - | - | - |
| **TECHNICAL FEATURES** | | | | | |
| Embossed | - | • | • | • | - |
| Smooth sides with chromed racks | • | - | - | - | • |
| n° door glass | 3 | 2 | 2 | 2 | 2 |
| Glass Door Type | Full glass flat | Full glass flat | Full glass flat | Full glass flat | Full glass flat |
| Removable door glass | - | - | - | - | - |
| Cold door | - | - | - | - | - |
| Tangential cooling fan | • | • | • | • | • |
| Security gas valve | • | - | • | • | - |
| n° lamps | 1 x 25 W | 1 x 25 W | 1 x 25 W | 1 x 25 W | 1 x 25 W |
| Net volume lt | 66 | 60 | 65 | 62 | 88 |
| Power W | 50 | 2.668 | 1.350 | 54 | - |
| Voltage/Frequency V/Hz | 220-240 / 50-60 | 220-240 / 50-60 | 220-240 / 50-60 | 220-240 / 50-60 | 220-240 / 50-60 |
| Efficiency energy class [1] | A | A | A | A | A |
| Energy consumption conventional [1] kWh/MJ | 1,59 / 5,71 | 0,88 | 1,59 / 5,71 | 1,59 / 5,71 | 2,00 / 7,2 |
| Energy consumption fan forced [1] kWh/MJ | - | 0,80 | - | - | 2,05 / 7,4 |
| **DIMENSIONS** | | | | | |
| Product HxWxD mm | 590x597x543 | 590x597x543 | 590x597x543 | 590x597x543 | 895x594x551 |
| Built-in HxWxD mm | 583/585x554/564x550 | 583/585x554/564x550 | 583/585x554/564x550 | 583/585x554/564x550 | 860x595x560 |
| Package HxWxD mm | 690x650x650 | 690x650x650 | 690x650x650 | 690x650x650 | 950x660x660 |

[1] from January 2015, according to regulation 65/2014

Colours legend: BK= Black IX-IXN= St. steel WH= White

| | GF9F | GF9G | GF993 | GFP993 |
|---|---|---|---|---|
| Collection | Excellence | Excellence | Excellence | Contemporaneo |
| Type | Static Gas/Electric Grill | Static Gas/Gas Grill | Multifunction | Multifunction |
| Colour | IXN - BKN | IXN - BKN | IXN | IX |
| Supply | 21 (Natural gas G20) | 21 (Natural gas G20) | Electric | Electric |
| **FUNCTIONS** | | | | |
| Programs number | 5 | 5 | 9 | 9 |
| Light | • | • | • | • |
| Pizza | - | - | • | • |
| Pre-heating | - | - | - | - |
| Traditional cooking | - | - | • | • |
| Bottom element | - | - | • | • |
| Bottom element + fan | - | - | - | - |
| Upper element | - | - | - | - |
| Grill | • | - | • | • |
| Grill + upper element (double grill) | - | - | • | • |
| Double grill + fan | - | - | - | - |
| Double grill + turnspit | - | - | - | - |
| Double grill + fan + turnspit | - | - | - | - |
| Grill + fan | - | - | • | • |
| Grill + turnspit | • | - | - | - |
| Grill + fan + turnspit | - | - | - | - |
| Static + fan | - | - | • | • |
| Multifunction (circular + fan) | - | - | • | • |
| Defrosting | - | - | - | - |
| Upper element + fan | - | - | - | - |
| Turnspit | - | - | - | - |
| Gas | • | • | - | - |
| Grill Gas | - | • | - | - |
| Grill Gas + fan | - | - | - | - |
| Grill Gas + turnspit | - | • | - | - |
| Grill Gas + turnspit + fan | - | - | - | - |
| Gas + fan | - | - | - | - |
| Gas + turnspit | • | • | - | - |
| Gas + turnspit + fan | - | - | - | - |
| Low temp | - | - | - | - |
| **PROGRAMMING** | | | | |
| Clock-Oven Control System | Minute minder 60’ | Minute minder 60’ | Electronic programmer | Touch electronic programmer |
| Pre set Temperature | - | - | - | - |
| **OVEN CAVITY** | | | | |
| Black enamel | • | • | • | • |
| Titanium enamel | - | - | - | - |
| **OVEN CAVITY EQUIPMENT** | | | | |
| n° grids | 2 | 2 | 2 | 2 |
| n° driptray | 1 | 1 | 1 | 1 |
| Turnspit | • | • | • | • |
| n° level with telescopic rails | - | - | - | - |
| Other accessories | - | - | - | 1 Pastry tray (15 mm) |
| **TECHNICAL FEATURES** | | | | |
| Embossed | - | - | - | - |
| Smooth sides with chromed racks | • | • | • | • |
| n° door glass | 2 | 2 | 3 | 3 |
| Glass Door Type | Full glass flat | Full glass flat | Full glass flat | Full glass flat |
| Removable door glass | - | - | - | - |
| Cold door | - | - | • | • |
| Tangential cooling fan | • | • | • | • |
| Security gas valve | - | - | - | - |
| n° lamps | 1 x 25 W | 1 x 25 W | 2 x 25 W | 2 x 25 W |
| Net volume lt | 105 | 95 | 89 | 89 |
| Power W | - | - | 2.700 | 3.500 |
| Voltage/Frequency V/Hz | 220-240 / 50-60 | 220-240 / 50-60 | 220-240 / 50-60 | 220-240 / 50-60 |
| Efficiency energy class [1] | A | A | A | A |
| Energy consumption conventional [1] kWh/MJ | 2,00 | 2,00 | 0,98 | 0,98 |
| Energy consumption fan forced [1] kWh/MJ | 1,00 | 1,00 | 1,05 | 1,05 |
| **DIMENSIONS** | | | | |
| Product HxWxD mm | 895x594x551 | 895x594x551 | 893x477x538 | 893x477x538 |
| Built-in HxWxD mm | 860x595x560 | 860x595x560 | 860x480x860 | 860x480x860 |
| Package HxWxD mm | 950x660x660 | 950x660x660 | 980x690x560 | 980x690x560 |

[1] from January 2015, according to regulation 65/2014

Colours legend: BKN= Black IX-IXN= St. steel WHN= White

# TECHNICAL FEATURES OVENS

| | | GFCS16 |
|---|---|---|
| Collection | | Contemporaneo |
| Dimension | mm | 600x450 |
| Type | | Compact 45 cm steam oven |
| Colour | | BK |
| **MAIN FEATURES** | | |
| Functions | | 4 + 1 (Steam, Regeneration, Cleaning, Descaling) + Sterilisation |
| Oven Capacity | lt | 35 |
| **FEATURES** | | |
| Digital clock | | • |
| Timer | | Electronic 0 to 90´ |
| Defrost functions by time | | • |
| Defrost functions by weight | | • |
| Controls | | Digital touch control |
| Auto menus | | 3 |
| Power levels | | 4 |
| Temperature levels | °C | - |
| Microwave power | kW | - |
| Grill power | kW | - |
| Convection power | kW | - |
| Turbo power | | - |
| Maximum power | kW | 1,000 |
| Combi Microwave / Grill | | - |
| Inner light | | • |
| Power cord with plug | | • |
| End cooking signal | | • |
| Preset function | | • |
| **CAVITY AND SAFETY** | | |
| Interior cavity | | St. steel |
| n° glass | | 2 |
| Safety child lock | | • |
| Tangential cooling fan | | • |
| **ACCESSORIES** | | |
| Smooth sides with chromed racks | | • (4 levels) |
| Enamelled tray | | - |
| Rotary plate | | - |
| Inox tray | | 1 Perforated/ 1 non perforated (40 and 20 mm) |
| Glass tray | | - |
| Water tank | lt | 1,4 |
| Telescopic grids | | - |
| Grids | | - |
| **TECHNICAL FEATURES** | | |
| Voltage/Frequency | V/Hz | 220-240 / 50 |
| Plug Type | | Schucko |
| Efficiency energy class [1] | | - |
| Energy consumption conventional [1] | kWh/MJ | - |
| Energy consumption fan forced [1] | kWh/MJ | - |
| Net Oven Capacity | lt | 35 |
| **WEIGHTS & DIMENSION** | | |
| Product WxDxH | mm | 595x472x455 |
| Built-in WxHxD | mm | 560-568x450x542 |
| Cavity WxDxH | mm | 420x390x210 |

[1] from January 2015, according to regulation 65/2014

| | | GFCWD |
|---|---|---|
| Collection | | Contemporaneo |
| Type | | Accessories |
| Colour | | IX |
| **MAIN FEATURES** | | |
| Nº of dish servings/settings | | 6 |
| Nº of dinner plates Ø28 cm | | 20 |
| Useful height | cm | 10 |
| Input power | W | 430 |
| Adjustable thermostat | °C | 30-70 |
| Thermostat control | | Electromechanic |
| Thermal protection at 110 °C | | • |
| Illuminated ON /OFF switch | | • |
| Anti-sliding mat | | • |
| Opening system | | push / pull |
| **WEIGHTS & DIMENSIONS** | | |
| Product HxWxD | mm | 139x595x542 |
| Built-in HxWxD | mm | 140x 595x542 |
| Packed HxWxD | mm | 250x645x670 |
| Weights Gross / net | kg | 20,3 / 18,0 |
| **TECHNICAL FEATURES** | | |
| Voltage/Frequency | V/Hz | 220-240 / 50-60 |
| Cable length | | 1,5 m |

Colours legend: BK= Black IX= St. steel WH= White

# TECHNICAL FEATURES MICROWAVE OVENS

| | | GMI253 |
|---|---|---|
| Type | | Built-in microwave |
| Colour | | IX |
| **MAIN FEATURES** | | |
| Oven Capacity | lt | 25 |
| Functions | | 3 |
| Door Opening | | Push button |
| **BASIC FEATURES** | | |
| Digital clock | | • |
| Timer | m | 0 to 95' with sound signal |
| Rotary plate | | 31,5 cm |
| Defrost functions by time | | • |
| Defrost functions by weight | | • |
| Controls | | digital |
| Auto menus | | 8 |
| Power levels | | 5 |
| Microwave power | W | 900 |
| Safety child lock | | • |
| Rack to cook "au gratin" | | • |
| Inner light | | • |
| Adjustable feet | | • |
| Power cord with plug | | • |
| End cooking signal | | • |
| Preset function | | - |
| Interior Cavity | | St. steel |
| **TECHNICAL FEATURES** | | |
| Voltage/Frequency | V/Hz | 230 / 50 |
| **WEIGHTS & DIMENSIONS** | | |
| Product with frame WxDxH | mm | 594x388x390 |
| Built-in WxDxH | mm | see technical draw |
| Cavity WxDxH | mm | 328x368x226 |

Colours legend: IX= St. steel

# TECHNICAL FEATURES INDUCTION HOBS

| | | GTIP14BK | GTIP84BK | GTI642 | GTI632 |
|---|---|---|---|---|---|
| Width | cm | 100 | 80 | 60 | 60 |
| Type | | Induction | Induction | Induction | Induction |
| Colours | | Black glass | Black glass | Black glass | Black glass |
| **SPECIFICATION** | | | | | |
| Type of control | | 4 Sliders touch control | 1 Slider touch control | Touch control | Touch control |
| Controls position | | Front | Front | Front | Front |
| Levels of power | n° | 9 | 9 | 9 | 9 |
| Front left heating element | mm/W | Ø 210 - 2.900/3.700 | Ø 280 - 2.600/3.700 | Ø 190 - 1.400/2.000 | Ø 190 - 1.400/2.000 |
| Rear left heating element | mm/W | Ø 210 - 2.900/3.700 | Ø 180 - 2.300/3.000 | Ø 160 - 1.200/1.400 | Ø 160 - 1.200/1.400 |
| Central heating element | mm/W | - | - | - | - |
| Rear right heating element | mm/W | Ø 210 - 2.900/3.700 | Ø 180 - 2.300/3.000 | Ø 200 - 2.300/3.000 | Ø 250 - 2.300/3.000 |
| Front right heating element | mm/W | Ø 210 - 2.900/3.700 | Ø 210 - 2.900/3.700 | Ø 160 - 1.200/1.400 | - |
| **FEATURES** | | | | | |
| Total power | W | 7.400 | 7.400 | 7.100 | 6.400 |
| On/Off | | • | • | • | • |
| Stop&Go | | • | • | - | - |
| Booster | | 4 double | 4 double | • | • |
| Heat up | | • | • | - | - |
| Timer | | • | • | • | • |
| Minute Minder | | • | • | • | • |
| Automatic temperatures | °C | 42 - 70 - 94 | 42 - 70 | - | - |
| Pot diameter detector/ Pan detection | | • | • | • | • |
| Residual Heat | | • | • | • | • |
| Child safety lock (Locking touch) | | • | • | • | • |
| Overflow safety device | | • | • | • | • |
| Automatic Stop | | • | • | • | • |
| Power management | | • | • | • | • |
| Power cord | | • | • | • | • |
| Cable length | mm | 1500 | 1500 | 1120 | 1120 |
| Scraper | | - | - | • | • |
| Voltage/Frequency | V/Hz | 220-240 / 50-60 | 220-240 / 50-60 | 220-230 / 50-60 | 220-230 / 50-60 |
| **DIMENSIONS** | | | | | |
| Product WxDxH | mm | 1000x410x49 | 780x520x49 | 580x510 | 580x510 |
| Built-in WxDxH | mm | 985x395 | 750x490 | 560x490 | 560x490 |

| | | GTIP42BK | GTIPW41BK | GTPN42BK | GTI322 |
|---|---|---|---|---|---|
| Width | cm | 38 | 38 | 38 | 30 |
| Type | | Induction | Induction wok | Teppanyaki | Induction |
| Colours | | Black glass | Black glass | St. steel grill plate | Black glass |
| **SPECIFICATION** | | | | | |
| Type of control | | 2 Sliders touch control | 1 Slider touch control | Touch control | Touch control |
| Controls position | | Front | Front | Front | Front |
| Levels of power | n° | 9 | 9 | 9 | 9 |
| Front left heating element | mm/W | Ø 220x180 - 2.100/2.600/3.700 | Ø 310 - 2.300/3.000 | Ø 1.400 | Ø 160 - 1.400 |
| Rear left heating element | mm/W | Ø 220x180 - 2.100/2.600/3.700 | - | Ø 1.400 | Ø 200 - 1.400/2.000 Ø |
| Central heating element | mm/W | - | - | - | - |
| Rear right heating element | mm/W | - | - | - | - |
| Front right heating element | mm/W | - | | - | - |
| **FEATURES** | | | | | |
| Total power | W | 3.700 | 3.000 | 2.800 | 3.400 |
| On/Off | | • | • | - | • |
| Stop&Go | | • | • | - | - |
| Booster | | • | • | - | • |
| Heat up | | • | • | - | - |
| Timer | | • | • | • | • |
| Minute Minder | | • | • | • | • |
| Automatic temperatures | °C | 42 - 70 - 94 | 42 - 70 - 94 | - | - |
| Pot diameter detector/ Pan detection | | • | • | - | • |
| Residual Heat | | • | • | • | • |
| Child safety lock (Locking touch) | | • | • | • | • |
| Overflow safety device | | • | • | • | • |
| Automatic Stop | | • | • | • | • |
| Power management | | • | • | • | - |
| Power cord | | • | • | • | • |
| Cable length | mm | 1.500 | 1.500 | 1.500 | 1.500 |
| Scraper | | - | - | - | - |
| Voltage/Frequency | V/Hz | 220-240 / 50-60 | 220-240 / 50-60 | 220-240 / 50-60 | 220-240 / 50-60 |
| **DIMENSIONS** | | | | | |
| Product WxDxH | mm | 520x380x48 | 520x380x121 | 520x380x64 | 290x510 |
| Built-in WxDxH | mm | 490x360 | 490x370 | 490x360 | 264x482 |

# TECHNICAL FEATURES CERAMIC HOBS

| | | GTH96T | GTH75TC | GTH64TF | GTH64TC |
|---|---|---|---|---|---|
| Size | cm | 90 | 75 | 60 | 60 |
| Type | | Ceramic glass | Ceramic glass | Ceramic glass | Ceramic glass |
| Glass colour | | Black | Black | Black | Black |
| **FEATURES** | | | | | |
| Controls | | Touch | Touch | Touch | Touch |
| Total power | W | 8.500 | 7.600 | 6.400 | 6.000 |
| **SPECIFICATION** | | | | | |
| Extensible hotplates | | 2 | 2 | - | - |
| Nr of power levels | | 9 | 9 | 9 | 9 |
| Controls position | | Front | Front | Front | Front |
| Front left heating element | mm/W | Ø 120/180 - 700/1.700 | Ø 140/210 - 1.000/2.200 | Ø 145 - 1.200 | Ø 180 - 1.800 |
| Rear left heating element | mm/W | Ø 145 - 1.200 | Ø 180 - 1.800 | Ø 120/210 - 700/2.200 | Ø 145 - 1.200 |
| Central heating element | mm/W | Ø 170/265 - 1.400/2.200 | - | - | - |
| Front right heating element | mm/W | Ø 145 - 1.200 | Ø 145 - 1.200 | Ø 145 - 1.200 | Ø 180 - 1.800 |
| Rear right heating element | mm/W | Ø 140/210 - 1.000/2.200 | Ø 170/265 - 1.400/2.200 | Ø 180 - 1.800 | Ø 145 - 1.200 |
| High-light | | 5 | 4 | 4 | 4 |
| **FEATURES** | | | | | |
| Timer | | • | • | • | - |
| Heat up | | - | - | - | - |
| Electric cable | | • | • | • | • |
| Voltage/Frequency | V/Hz | 220-230-240 / 50-60 | 220-240 / 50-60 | 220-230-240 / 50-60 | 220-230-240 / 50-60 |
| Scraper | | • | • | • | • |
| **SAFETY** | | | | | |
| Residual heat indicator | | • | • | • | • |
| Child safety lock | | • | • | • | • |
| Overflow safety device | | • | • | • | • |
| Automatic stop | | • | • | • | • |
| **DIMENSIONS** | | | | | |
| Product WxDxH | mm | 880x510x40 | 770x510x40 | 580x510x40 | 580x510x40 |
| Built-in WxDxH | mm | 860x490x40 | 750x490x40 | 560x490x40 | 560x490x40 |

| | | GTH63TBK | GTHP42BK | GTH32K |
|---|---|---|---|---|
| Size | cm | 60 | 38 | 30 |
| Type | | Ceramic glass | Ceramic glass | Ceramic glass |
| Glass colour | | Black | Black (no frame) | Black (no frame) |
| **FEATURES** | | | | |
| Frame | | - | - | - |
| Controls | | Touch | Touch | Knobs |
| Total power | W | 5.500 | 3.000 | 3.000 |
| **SPECIFICATION** | | | | |
| Extensible hotplates | | 1 | - | - |
| Nr of power levels | | 9 | 9 | 6 |
| Controls position | | Front | Front | Front |
| Front left heating element | mm/W | Ø 180 - 1.800 | Ø 155 - 1.200 | Ø 145 - 1.200 |
| Rear left heating element | mm/W | Ø 145 - 1.200 | Ø 190 - 1.800 | Ø 180 - 1.800 |
| Central heating element | mm/W | - | - | - |
| Front right heating element | mm/W | - | - | - |
| Rear right heating element | mm/W | Ø 140/230 - 1.200/2.500 | - | - |
| High-light | | 3 | 2 | 2 |
| **FEATURES** | | | | |
| Memory | | - | • | - |
| Timer | | - | • | - |
| Heat up | | - | • | - |
| Electric cable | | • | • | • |
| Voltage/Frequency | V/Hz | 220-230-240 / 50-60 | 220-240 / 50-60 | 220-240 / 50-60 |
| Scraper | | • | - | • |
| **SAFETY** | | | | |
| Residual heat indicator | | • | • | • |
| Child safety lock | | - | • | - |
| Overflow safety device | | - | • | - |
| Automatic stop | | - | • | - |
| **DIMENSIONS** | | | | |
| Product WxDxH | mm | 580x510x40 | 520x380x45 | 290x510x40 |
| Built-in WxDxH | mm | 560x490x40 | 490x350x41 | 270x490x40 |

# TECHNICAL FEATURES CRYSTAL GAS HOBS

| | | GV955 | GV755 | GV64 | GVP635H | GVP415H | GVP42H |
|---|---|---|---|---|---|---|---|
| Width | cm | 90 | 70 | 60 | 60 | 38 | 38 |
| Type | | Crystal gas | Crystal gas | Crystal gas | Crystal gas | Crystal gas | Crystal gas |
| Colours | | BK | BK | BK | BK | BK | BK |
| **FEATURES** | | | | | | | |
| Controls | | Knobs | Knobs | Knobs | Knobs | Knobs | Knobs |
| Nr gas zones | | 5 | 5 | 4 | 3 | 1 | 2 |
| Front left burner | W | 1.000 | 1.000 | 3.000 | 1.000 | - | - |
| Rear left burner | W | 3.000 | 3.000 | 1.650 | 1.650 | - | - |
| Front burner | W | 3.500 | 3.500 | - | - | 5.000 | 1.000 |
| Rear burner | W | - | - | - | - | - | 3.000 |
| Front right burner | W | 1.650 | 1.650 | 1.000 | 3.500 | - | - |
| Rear right burner | W | 1.650 | 1.650 | 1.650 | - | - | - |
| Flame failure device (FFD) | | • | • | • | • | • | • |
| One hand ignition | | • | • | • | • | • | • |
| Cast iron pan supports | | - | - | - | • | • | • |
| **DIMENSIONS** | | | | | | | |
| Product HxWxD | mm | 51x900x510 | 51x700x510 | 51x600x510 | 51x600x510 | 55x380x520 | 55x380x520 |
| Built-in HxWxD | mm | 50x750x480 | 50x550x480 | 50x550x480 | 50x550x480 | 350x495 | 350x495 |
| Packaging HxWxD | mm | 150x1000x580 | 150x800x580 | 150x700x580 | 150x700x580 | 145x440x555 | 145x440x555 |

Colours legend: BK= Black

# TECHNICAL FEATURES GAS HOBS

| | | GT951H | GT955H | GT955 | GT955N | GT96N | GT968N |
|---|---|---|---|---|---|---|---|
| Width | cm | 90 | 90 | 90 | 90 | 90 | 90 |
| Type | | Gas | Gas | Gas | Gas | Gas | Gas |
| Colours | | IX | IX - WH - BK | IX - WH - BK | IX - WH - BK | IX - WH - BK | IX - WH - BK |
| **FEATURES** | | | | | | | |
| Controls | | Front | Front | Front | Front | Front | Front |
| Nr electric zones | | - | - | - | - | - | 2 |
| Nr gas zones | | 5 | 5 | 5 | 5 | 6 | 4 |
| Front left burner | W | 4.500 - 800 | 1.000 | 1.000 | 1.000 | 1.000 | 1.000 |
| Rear left burner | W | - | 3.000 | 3.000 | 3.000 | 3.000 | 3.000 |
| Front burner | W | 1.000 | 3.800 | 3.800 | 3.800 | 1.750 | Ø 180 - 2.000 |
| Rear burner | W | 1.750 | - | - | - | 3.000 | Ø 145 - 1.500 |
| Front right burner | W | 1.750 | 1.750 | 1.750 | 1.750 | 1.750 | 1.750 |
| Rear right burner | W | 3.000 | 1.750 | 1.750 | 1.750 | 1.750 | 1.750 |
| Flame failure device (FFD) | | • | • | • | - | - | - |
| One hand ignition | | • | • | • | • | • | • |
| **PAN SUPPORTS** | | | | | | | |
| Matt enamelled pan supports | | - | - | • | • | • | • |
| Cast iron pan supports | | • | • | - | - | - | - |
| **DIMENSIONS** | | | | | | | |
| Product HxWxD | mm | 30x860x500 | 30x860x500 | 30x860x500 | 30x860x500 | 30x860x500 | 30x860x500 |
| Built-in HxWxD | mm | 30x830x480 | 30x830x480 | 30x830x480 | 30x830x480 | 30x830x480 | 30x830x480 |
| Packaging HxWxD | mm | 138x911x564 | 138x911x564 | 138x911x564 | 138x911x564 | 138x911x564 | 138x911x564 |

| | | GTL955 | GTL955N | GTL968 | GTL968N | GTS51H | GT851H |
|---|---|---|---|---|---|---|---|
| Width | cm | 90 | 90 | 90 | 90 | 75 | 75 |
| Type | | Gas | Gas | Gas | Gas | Gas | Gas |
| Colours | | IX - WH - BK | IX - WH - BK | IX - WH - BK | IX - WH - BK | IX | IX |
| **FEATURES** | | | | | | | |
| Controls | | Side | Side | Side | Side | Front | Front |
| Nr electric zones | | - | - | 2 | 2 | - | - |
| Nr gas zones | | 5 | 5 | 4 | 4 | 5 | 5 |
| Front left burner | W | 3.000 | 3.000 | 1.750 | 1.750 | 3.000 | 4.500 - 800 |
| Rear left burner | W | 1.750 | 1.750 | 3.000 | 3.000 | 1.750 | - |
| Front burner | W | 3.300 | 3.300 | Ø 180 - 2.000 | Ø 180 - 2.000 | 1.000 | 1.000 |
| Rear burner | W | - | - | Ø 145 - 1.500 | Ø 145 - 1.500 | 1.750 | 1.750 |
| Front right burner | W | 1.000 | 1.000 | 1.000 | 1.000 | 4.500 - 800 | 1.750 |
| Rear right burner | W | 1.750 | 1.750 | 1.750 | 1.750 | - | 3.000 |
| Flame failure device (FFD) | | • | - | • | - | • | • |
| One hand ignition | | • | • | • | • | • | • |
| **PAN SUPPORTS** | | | | | | | |
| Matt enamelled pan supports | | • | • | • | • | - | - |
| Cast iron pan supports | | - | - | - | - | • | • |
| **DIMENSIONS** | | | | | | | |
| Product HxWxD | mm | 30x860x500 | 30x860x500 | 30x860x500 | 30x860x500 | 70x740x500 | 30x740x500 |
| Built-in HxWxD | mm | 30x830x480 | 30x830x480 | 30x830x480 | 30x830x480 | 70x720x480 | 30x560x480 |
| Packaging HxWxD | mm | 138x911x564 | 138x911x564 | 138x911x564 | 138x911x564 | 138x791x564 | 138x791x564 |

Colours legend: BK= Black IX= St. steel WH= White

| | | GT842H | GT871H | GT755H | GT755 | GT755N | GT731 |
|---|---|---|---|---|---|---|---|
| Width | cm | 75 | 75 | 70 | 70 | 70 | 70 |
| Type | | Gas | Gas | Gas | Gas | Gas | Gas |
| Colours | | IX | IX | IX - WH - BK | IX - WH - BK | IX - WH - BK | IX |
| **FEATURES** | | | | | | | |
| Controls | | Front | Front | Front | Front | Front | Front |
| Nr electric zones | | - | - | - | - | - | - |
| Nr gas zones | | 4 | 5 | 5 | 5 | 5 | 3 |
| Front left burner | W | 4.500 - 800 | 1.000 | 1.000 | 1.000 | 1.000 | 4.500 - 800 |
| Rear left burner | W | - | 3.000 | 3.000 | 3.000 | 3.000 | - |
| Front burner | W | 1.000 | 4.500 - 800 | 3.300 | 3.300 | 3.300 | - |
| Rear burner | W | 1.750 | - | - | - | - | - |
| Front right burner | W | 3.300 | 1.750 | 1.750 | 1.750 | 1.750 | 1.750 |
| Rear right burner | W | - | 1.750 | 1.750 | 1.750 | 1.750 | 1.750 |
| Flame failure device (FFD) | | • | • | • | • | - | • |
| One hand ignition | | • | • | • | • | • | • |
| **PAN SUPPORTS** | | | | | | | |
| Matt enamelled pan supports | | - | - | - | • | • | • |
| Cast iron pan supports | | • | • | • | - | - | - |
| **DIMENSIONS** | | | | | | | |
| Product HxWxD | mm | 30x740x500 | 30x740x500 | 30x685x500 | 30x685x500 | 30x685x500 | 30x685x500 |
| Built-in HxWxD | mm | 30x560x480 | 30x560x480 | 30x560x480 | 30x560x480 | 30x560x480 | 30x560x480 |
| Packaging HxWxD | mm | 138x791x564 | 138x791x564 | 138x736x564 | 138x736x564 | 138x736x564 | 138x736x564 |

| | | GT731N | GT685H | GT64H | GT64 | GT64N | GT685 |
|---|---|---|---|---|---|---|---|
| Collection | | Contemporaneo | Contemporaneo | Contemporaneo | Contemporaneo | Contemporaneo | Contemporaneo |
| Width | cm | 70 | 60 | 60 | 60 | 60 | 60 |
| Type | | Gas | Gas | Gas | Gas | Gas | Gas |
| Colours | | IX | IX - WH - BK | IX - WH - BK | IX - WH - BK | IX - WH - BK | IX - WH - BK |
| **FEATURES** | | | | | | | |
| Controls | | Front | Front | Front | Front | Front | Front |
| Nr electric zones | | - | - | - | - | - | - |
| Nr gas zones | | 3 | 4 | 4 | 4 | 4 | 4 |
| Front left burner | W | 4.500 - 800 | 3.800 | 1.000 | 1.000 | 1.000 | 3.800 |
| Rear left burner | W | - | 1.000 | 3.000 | 3.000 | 3.000 | 1.000 |
| Front burner | W | - | - | - | - | - | - |
| Rear burner | W | - | - | - | - | - | - |
| Front right burner | W | 1.750 | 1.750 | 1.750 | 1.750 | 1.750 | 1.750 |
| Rear right burner | W | 1.750 | 1.750 | 1.750 | 1.750 | 1.750 | 1.750 |
| Flame failure device (FFD) | | - | • | • | • | - | • |
| One hand ignition | | • | • | • | • | • | • |
| **PAN SUPPORTS** | | | | | | | |
| Matt enamelled pan supports | | • | - | - | • | • | • |
| Cast iron pan supports | | - | • | • | - | - | - |
| **DIMENSIONS** | | | | | | | |
| Product HxWxD | mm | 30x685x500 | 30x585x500 | 30x585x500 | 30x585x500 | 30x585x500 | 30x585x500 |
| Built-in HxWxD | mm | 30x560x480 | 30x560x480 | 30x560x480 | 30x560x480 | 30x560x480 | 30x560x480 |
| Packaging HxWxD | mm | 138x736x564 | 138x636x564 | 138x636x564 | 138x636x564 | 138x636x564 | 138x636x564 |

| | | GT685N | GT645 | GT647 | GT647N | GTL64 | GTL64N |
|---|---|---|---|---|---|---|---|
| Width | cm | 60 | 60 | 60 | 60 | 60 | 60 |
| Type | | Gas | Gas | Gas | Gas | Gas | Gas |
| Colours | | IX - WH - BK | IX | IX - WH - BK | IX - WH - BK | IX - WH - BK | IX - WH - BK |
| **FEATURES** | | | | | | | |
| Controls | | Front | Front | Front | Front | Side | Side |
| Nr electric zones | | - | - | 1 | 1 | - | - |
| Nr gas zones | | 4 | 4 | 3 | 3 | 4 | 4 |
| Front left burner | W | 3.800 | 3.000 | 1.000 | 1.000 | 3.000 | 3.000 |
| Rear left burner | W | 1.000 | - | 3.000 | 3.000 | 1.750 | 1.750 |
| Front burner | W | - | 1.000 | - | - | - | - |
| Rear burner | W | - | 1.750 | - | - | - | - |
| Front right burner | W | 1.750 | 3.300 | 1.750 | 1.750 | 1.000 | 1.000 |
| Rear right burner | W | 1.750 | - | Ø 145 - 1.500 | Ø 145 - 1.500 | 1.750 | 1.750 |
| Flame failure device (FFD) | | - | • | • | - | • | - |
| One hand ignition | | • | • | • | • | • | • |
| **PAN SUPPORTS** | | | | | | | |
| Matt enamelled pan supports | | • | • | • | • | • | • |
| Cast iron pan supports | | - | - | - | - | - | - |
| **DIMENSIONS** | | | | | | | |
| Product HxWxD | mm | 30x585x500 | 30x585x500 | 30x585x500 | 30x585x500 | 30x585x500 | 30x585x500 |
| Built-in HxWxD | mm | 30x560x480 | 30x560x480 | 30x560x480 | 30x560x480 | 30x560x480 | 30x560x480 |
| Packaging HxWxD | mm | 138x636x564 | 138x636x564 | 138x636x564 | 138x636x564 | 138x636x564 | 138x636x564 |

Colours legend: BK= Black IX= St. steel WH= White

# TECHNICAL FEATURES GAS/ELECTRIC HOBS AND DOMINO

| | | GTL647 | GTL647N | GTL640 | GT415H | GT42H |
|---|---|---|---|---|---|---|
| Width | cm | 60 | 60 | 60 | 37 | 37 |
| Type | | Gas | Gas | Electric | Gas | Gas |
| Colours | | IX - WH | IX - WH | IX - WH | IX | IX |
| **FEATURES** | | | | | | |
| Controls | | Side | Side | Side | Front | Front |
| Nr electric zones | | 1 | 1 | 4 | - | - |
| Nr gas zones | | 3 | 3 | - | 1 | 2 |
| Front left burner | W | 3.000 | 3.000 | Ø 180 - 2.000 | - | - |
| Rear left burner | W | Ø 145 - 1.500 | Ø 145 - 1.500 | Ø 145 - 1.500 | - | - |
| Front burner | W | - | - | - | 3.800 | 1.000 |
| Rear burner | W | - | - | - | - | 3.000 |
| Front right burner | W | 1.000 | 1.000 | Ø 145 - 1.000 | - | - |
| Rear right burner | W | 1.750 | 1.750 | Ø 180 - 1.500 | - | - |
| Flame failure device (FFD) | | • | - | - | • | • |
| One hand ignition | | • | • | - | • | • |
| **PAN SUPPORTS** | | | | | | |
| Matt enamelled pan supports | | • | • | - | - | - |
| Cast iron pan supports | | - | - | - | • | • |
| **DIMENSIONS** | | | | | | |
| Product HxWxD | mm | 30x585x500 | 30x585x500 | 30x585x500 | 33x370x500 | 33x370x500 |
| Built-in HxWxD | mm | 30x560x480 | 30x560x480 | 30x560x480 | 33x350x490 | 33x350x490 |
| Packaging HxWxD | mm | 138x636x564 | 138x636x564 | 138x636x564 | 143x430x564 | 143x430x564 |

| | | GT32 | GT32N | GT320 | GT3B | GT3F | GTH32K |
|---|---|---|---|---|---|---|---|
| Width | cm | 30 | 30 | 30 | 30 | 30 | 30 |
| Type | | Gas | Gas | Electric | Electric | Electric | Electric |
| Colours | | IX | IX | IX | IX | IX | IX |
| **FEATURES** | | | | | | | |
| Controls | | Front | Front | Front | Front | Front | Front |
| Nr electric zones | | - | - | 2 | 1 | 1 | - |
| Nr gas zones | | 2 | 2 | - | - | - | - |
| Nr highlight zones | | - | - | - | - | - | 2 |
| Front left burner | W | - | - | - | - | - | - |
| Rear left burner | W | - | - | - | - | - | - |
| Front burner | W | 1.000 | 1.000 | Ø 145 - 1.500 | 2.400 | 2.300 | Ø 140 - 1.200 |
| Rear burner | W | 3.000 | 3.000 | Ø 180 - 2.000 | - | - | Ø 180 - 1.800 |
| Front right burner | W | - | - | - | - | - | - |
| Rear right burner | W | - | - | - | - | - | - |
| Flame failure device (FFD) | | • | - | - | - | - | - |
| One hand ignition | | • | • | - | - | - | - |
| **PAN SUPPORTS** | | | | | | | |
| Matt enamelled pan supports | | • | • | - | • | - | - |
| Cast iron pan supports | | - | - | - | - | - | - |
| **DIMENSIONS** | | | | | | | |
| Product HxWxD | mm | 30x290x510 | 30x290x510 | 30x290x510 | 50x290x510 | 155x290x510 | 40x290x510 |
| Built-in HxWxD | mm | 30x265x480 | 30x265x480 | 30x265x480 | 50x265x480 | 155x265x480 | 40x265x480 |
| Packaging HxWxD | mm | 138x342x564 | 138x342x564 | 138x342x564 | 138x342x564 | 138x342x564 | 138x342x564 |

Colours legend: BK= Black IX= St. steel WH= White

| | | GHIB98 | GHS98 | GHS68 |
|---|---|---|---|---|
| Dimensions | cm | 90 | 90 | 60 |
| Type | | Island | Wall Glass | Wall Glass |
| Colour | | IX | IX | IX |
| **FEATURES** | | | | |
| Suction power | m³/h | 600 (700) | 735 | 735 |
| Noise level - max speed Power | dBa | 50 | 69 | 69 |
| Noise level - speed level 1 | dBa | - | 59 | 59 |
| Nº of blower | | 1 | 1 | 1 |
| Speeds | | 3+1 | 2+1 | 2+1 |
| Booster | | • | • | • |
| Delay start | | - | - | - |
| Clean Air | | - | - | - |
| Saturation filter alarm | | • | - | - |
| Lamps | | 4x20W halogen | 2x20W halogen | 2x20W halogen |
| Perimetral aspiration | | - | - | - |
| Grease filters (Aluminium) | | • | 2 | 2 |
| Grease filters (Acrylic) | | - | - | - |
| Grease filters (Metalic) | | - | - | - |
| Carbon filters | | • | 1 | 1 |
| Controls | | Electronic lighted button | Electronic lighted button | Electronic lighted button |
| Air outlet size | mm | Ø 150 / 120 | Ø 150 / 120 | Ø 150 / 120 |
| Plug | | - | - | - |
| Cable length | cm | 120 | 150 | 150 |
| No return valve | | • | • | • |
| Motor power | W | 250 | 250 | 250 |
| Voltage/Frequency | V/Hz | 220-240 / 50 | 230-240 / 50 | 230-240 / 50 |
| Efficiency energy class [1] | | D | C | C |
| **DIMENSIONS** | | | | |
| Product HxWxD | mm | see drawing | see drawing | see drawing |
| Packing HxWxD | mm | - | 1020x510x655 | - |

| | | GHR98 | GHB98 | GHP980 | GHP680 |
|---|---|---|---|---|---|
| Dimensions | cm | 90 | 90 | 90 | 60 |
| Type | | Wall Curved | Wall Box | Wall Chimney | Wall Chimney |
| Colour | | IX | IX | IX | IX |
| **FEATURES** | | | | | |
| Suction power | m³/h | 735 | 735 | 725 | 725 |
| Noise level - max speed Power | dBa | 69 | 69 | 66 | 66 |
| Noise level - speed level 1 | dBa | 59 | 59 | 54 | 54 |
| Nº of blower | | 1 | 1 | 1 | 1 |
| Speeds | | 2+1 | 2+1 | 3+1 | 3+1 |
| Booster | | • | • | • | • |
| Delay start | | - | - | • | • |
| Clean Air | | - | - | - | - |
| Saturation filter alarm | | - | - | • | • |
| Lamps | | 2x20W halogen | 2x20W halogen | 2x20W halogen | 2x20W halogen |
| Perimetral aspiration | | - | - | - | - |
| Grease filters (Aluminium) | | 2 | 3 | 3 | 1 |
| Grease filters (Acrylic) | | - | - | - | - |
| Grease filters (Metalic) | | - | - | - | - |
| Carbon filters | | 2 | 1 | 2 | 2 |
| Controls | | Electronic lighted button | Electronic lighted button | Electronic lighted button | Electronic lighted button |
| Air outlet size | mm | Ø 150 / 120 | Ø 150 / 120 | Ø 150 / 120 | Ø 150 / 120 |
| Plug | | - | - | - | - |
| Cable length | cm | 150 | 150 | 150 | 150 |
| No return valve | | • | • | • | • |
| Motor power | W | 250 | 250 | 250 | 250 |
| Voltage/Frequency | V/Hz | 230-240 / 50 | 230-240 / 50 | 230-240 / 50 | 230-240 / 50 |
| Efficiency energy class [1] | | C | C | C | C |
| **DIMENSIONS** | | | | | |
| Product HxWxD | mm | see drawing | see drawing | 900x450x240 | 600x450x240 |
| Packing HxWxD | mm | 985x470x625 | 985x470x625 | 970x550x305 | 670x550x305 |

[1] from January 2015, according to regulation 65/2014

Colours legend: BK= Black IX= St. steel WH= White

# TECHNICAL FEATURES HOODS

| | | GHP940 | GHP640 | GHC95 | GHC65 |
|---|---|---|---|---|---|
| Dimensions | cm | 90 | 60 | 90 | 60 |
| Type | | Wall Chimney | Wall Chimney | Standard | Standard |
| Colour | | IX | IX | IX | IX |
| **FEATURES** | | | | | |
| Suction power | m³/h | 420 | 420 | 360 | 360 |
| Noise level - max speed Power | dBa | 66 | 66 | 65 | 65 |
| Noise level - speed level 1 | dBa | 53 | 53 | 55 | 55 |
| Nº of blower | | 1 | 1 | 2 | 2 |
| Speeds | | 3 | 3 | 3 | 3 |
| Booster | | - | - | - | - |
| Delay start | | - | - | - | - |
| Clean Air | | - | - | - | - |
| Saturation filter alarm | | - | - | - | - |
| Lamps | | 2x28W candle halogen | 2x28W candle halogen | 2x28W | 2x28W |
| Perimetral aspiration | | - | - | - | - |
| Grease filters (Aluminium) | | 3 | 1 | 1 | - |
| Grease filters (Acrylic) | | - | - | - | - |
| Grease filters (Metalic) | | - | - | - | 1 |
| Carbon filters | | 2 | 2 | 1 | 1 |
| Controls | | Push button | Push button | Push button | Push button |
| Air outlet size | mm | Ø 150 / 120 | Ø 150 / 120 | Ø 123 | Ø 123 |
| Plug | | - | - | - | - |
| Cable length | cm | 150 | 150 | 175 | 175 |
| No return valve | | • | • | • | • |
| Motor power | W | 135 | 135 | 300 | 300 |
| Voltage/Frequency | V/Hz | 230-240 / 50 | 230-240 / 50 | 220-240 / 50 | 220-240 / 50 |
| Efficiency energy class [1] | | E | E | F | F |
| **DIMENSIONS** | | | | | |
| Product HxWxD | mm | 900x450x240 | 600x450x240 | 900x495x140 | 600x495x140 |
| Packing HxWxD | mm | 970x550x305 | 670x550x305 | 965x195x560 | 665x195x560 |

| | | GHE90 | GHE60 |
|---|---|---|---|
| Dimensions | cm | 90 | 60 |
| Type | | Undercabinet | Undercabinet |
| Colour | | SI | SI |
| **FEATURES** | | | |
| Suction power | m³/h | 171 | 171 |
| Noise level - max speed Power | dBa | 61 | 61 |
| Noise level - speed level 1 | dBa | - | - |
| Nº of blower | | 1 | 1 |
| Speeds | | 3 | 3 |
| Booster | | - | - |
| Delay start | | - | - |
| Clean Air | | - | - |
| Saturation filter alarm | | - | - |
| Lamps | | 1x28W | 1x28W |
| Perimetral aspiration | | - | - |
| Grease filters (Aluminium) | | - | - |
| Grease filters (Acrylic) | | 1 | 1 |
| Grease filters (Metalic) | | - | - |
| Carbon filters | | 1 | 1 |
| Controls | | Slider | Slider |
| Air outlet size | mm | Ø 120 | Ø 120 |
| Plug | | - | - |
| Cable length | cm | 100 | 100 |
| No return valve | | - | - |
| Motor power | W | 110 | 110 |
| Voltage/Frequency | V/Hz | 220-240 / 50 | 220-240 / 50 |
| Efficiency energy class [1] | | E | E |
| **DIMENSIONS** | | | |
| Product HxWxD | mm | see drawing | see drawing |
| Packing HxWxD | mm | 990x243x391 | 625x180x326 |

[1] from January 2015, according to regulation 65/2014

Colours legend: BK= Black IX= St. steel WH= White SI= Metallic Silver

MARKETING
Glem Gas

AD & GRAPHIC DESIGN
Ikos

*Glem Gas S.p.A. reserves the right unilaterally at any time to change its own products without altering the catalogue contents accordingly.*

012T12.2 05/2017

GLEM

Glem Gas S.p.A.
via Modenese, 4266
41018 San Cesario S.P.
Modena - Italy
tel. +39 059 959111
fax +39 059 959150
info@glemgas.com
www.glemgas.com