Glem Stainless Steel Compact Cooker Solutions

Italian designed. Italian made.

53cm & 60cm ALL GAS OR DUAL FUEL and 70cm BI-ENERGY

Glem Gas has been manufacturing cookers in Italy since 1959. Based in Modena, home to Ferrari, this collection of Compact Cookers has been created especially for the Australian market where the sizes are perfect for replacing an old cooker or for installing in a brand new kitchen where space is a premium. They are all a simple 10 amp plug in electrical connection and all include an LPG conversion kit.

The latest in Italian Design and Development

GLEM

Choosing between electric and gas – they are both great. Gas is a moist heat. There is less shri
Electricity is a dry heat. Pastries are crisp and crunchy. Multi

The Glem 53cm Cooker Solution

The easiest kitchen renovation. Beautiful stainless steel and Italian Design. The 4 burner cooktop has flame failure safety devices installed on every burner. The trivets are heavy duty cast iron and the oven is a full size 67 litre capacity. Adjustable Stainless steel legs means the cooker adjusts to existing bench heights.

The hand made one piece stainless steel hob is unique. The rear splash back is part of the hob, so easy to wipe clean. No crevices that create a build-up of cooking residues.

The 53cm width allows the cooker to be installed as a replacement for the standard white cooker without having to change cupboards or benches.

GAS OR DUAL FUEL

GL53GI ALL GAS COOKER
with fan assisted gas oven

The oven has fan assistance function and static gas function. The fan assists in distributing the heat evenly when cooking on more than one shelf.

The integral grill is electric and there is a fan assisted function for grilling thicker cuts of meat.

GL53EI DUAL FUEL COOKER
with fan forced electric oven

Fan forced electric ovens are very efficient. The fan literally forces the air through the electric element pushing the heat into all parts of the oven. Faster cooking and heat up times.

FEATURES

- 53cm width fits straight into the space of a standard white cooker
- Handmade stylish square hob with single piece splash back is so much easier to keep clean.
- Flame failure safety devices are fitted to all burners. In the event of the flame going out the gas stops flowing
- Double glass door with large viewing window
- Simple 10amp plug in electric connection for all models
- Big oven capacity of 67 litres total with 60 litres of usable space
- Closed door electric grilling, clean and efficient
- Heavy duty cast iron trivets, durable, stable and safe.
- Height adjustable to 920mm to perfectly match your bench height
- Automatic electronic ignition controlled through the knob.
- Titanium easy clean enamel with super low porosity
- Removable inner door glass for easy door cleaning
- 60 minute count down timer for monitoring cooking

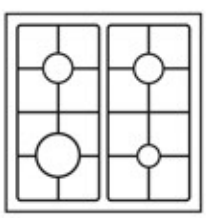

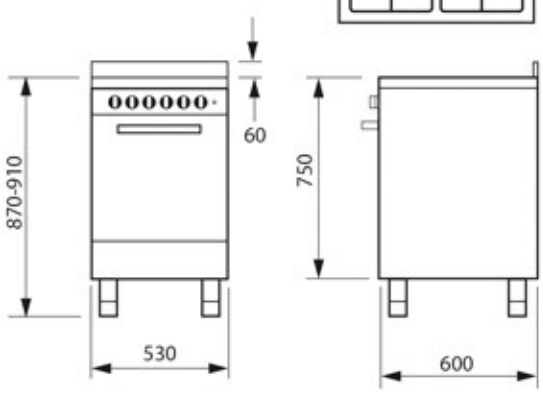

ALL GAS COOKER GL53GI
Fan Assisted Gas Oven functions

DUAL FUEL COOKER GL53EI
Electric Fan Forced Oven functions

hrinkage when roasting meats. The oven heats up faster and in a blackout keeps on running. ultifunction ovens give fl xibility in how the heat is applied.

The Glem 60cm Cooker Solution

A triple ring wok burner with two medium burners and a simmer burner means that the Glem 60cm cookers have features often only seen on larger cookers. Flame failure safety devices are fitted to all urners. There is a digital clock for timing cooking periods and a storage compartment underneath where cooling trays can conveniently be stored.

The 67 litre oven is available as fan assisted gas oven or a 6 function electric oven. Both models are a simple 10 amp plug in connection.

GAS OR DUAL FUEL

GAS OVEN 25W* OFF GRID READY

UN664MVI ALL GAS COOKER
with fan assisted gas oven

You will be amazed by the cooking results achieved in a Glem Fan Assisted Gas oven. Roasts taste better and remain moist, pastries stay fresher for longer and the fan assistance allows for multi batch cooking with no cold spots.

The integral grill is electric and there is a fan assisted function for grilling thicker cuts of meat.

UN664EI DUAL FUEL COOKER
with multifunction electric oven

Having the ability to change the way the oven cavity is heated is a real advantage if you are cooking a range of different foods. A static oven might be preferable when cooking a soufflé whereas fan forced is specified in many recipes for its fast cooking and even heat distribution.

FEATURES

- 4 burner gas hob with triple ring wok burner
- Flame failure safety devices are fitted to all burners. In the event of the flame going out the gas stops flowing
- Double glass door with large viewing window
- Electronic ignition for reliable easy lighting
- Cast iron trivets, strong and hard wearing
- Digital clock for accurate time control
- Adjustable stainless steel legs to match your bench height
- Storage compartment under the oven, perfect for storing baking trays
- Closed door electric grilling, clean and efficient
- Click and slide removable inner glass for easy cleaning of the door
- Fan on and off option for flexible cooking performance
- Titanium enamel interior for easier cleaning
- Automatic cooling fan
- LPG Conversion kit included with every cooker

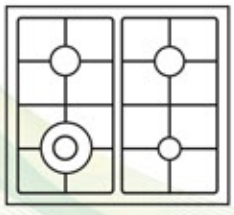

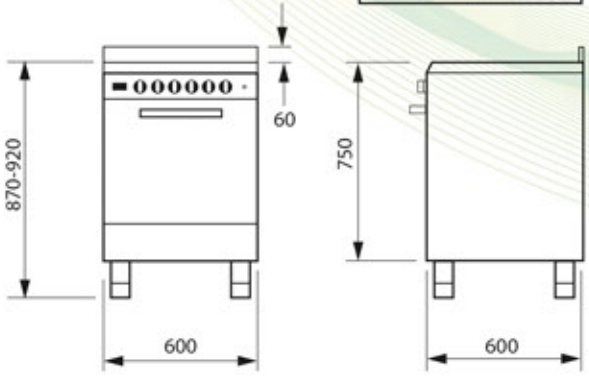

ALL GAS COOKER UN664MVI
Fan Assisted Gas Oven functions

DUAL FUEL COOKER UN664EI
Electric Fan Forced Oven functions

The Glem 70cm Cooker Solution

GLEM ENERGY SELECTIVE OVEN ON A 70cm COOKER

This is called a Bi Energy cooker because it has an Energy Selective oven. You have the choice. Gas and electricity for recipe selectivity. If cooking a roast use gas for more succulent results with minimal shrinkage. Wanting crispy oven fries for the kids? Use fan forced electricity for its dry heat properties that remove moisture from the food.

BI-ENERGY

UN765GGEI

GAS OVEN 25W* OFF GRID READY

This is the best of both worlds. A 5 burner cooktop as found on most 90cm cookers but on a cooker that is only 70cm wide. There is a centre triple ring wok burner, a large burner, 2 medium burners and a simmer burner to cater for all cooking needs. Flame failure safety devices are fitted to all burners and there is a handy storage compartment under the oven for storing cooling trays.

The oven is something special. Energy Selective. The ultimate oven in a 70cm cooker.

FEATURES

- 5 burner gas hob with centre triple ring wok burner
- Energy selective oven
- Flame failure safety devices are fitted to all burners. In the event of the flame going out the gas stops flowing
- Double glass door with large viewing window
- Electronic ignition for reliable easy lighting
- Cast iron trivets, strong and hard wearing
- Digital clock for accurate time control
- Adjustable stainless steel legs to match your bench height
- Storage compartment under the oven, perfect for storing baking trays
- Closed door electric grilling, clean and efficient
- Click and slide removable inner glass for easy cleaning of the door
- Titanium enamel interior for easier cleaning
- Automatic cooling fan
- LPG Conversion kit included with every cooker

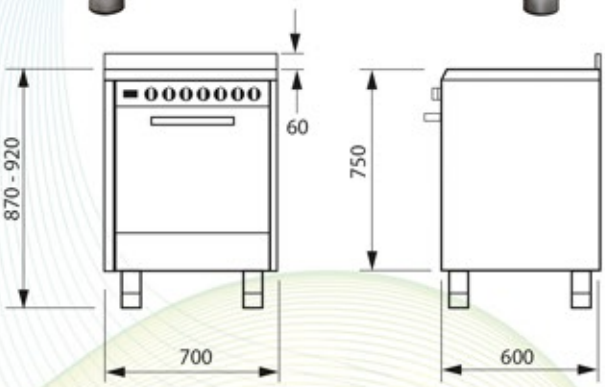

BI-ENERGY COOKER UN765GGEI

Oven functions

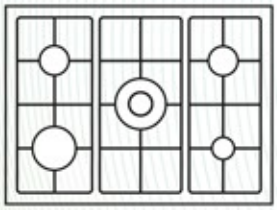

GAS OVEN 25W* ELECTRICITY CONSUMPTION OFF GRID READY

Glem Gas ovens are Off Grid ready. The gas oven has an electricity consumption that is only 1 percent of what an equivalent electric oven would use. The only consumption is for the cooling fan, which represents just 25 watts of energy usage. Glem Gas ovens can even operate without the power connected due to the thermocouple controller.

The unique Glem Bi Energy oven is also ideal for anyone hoping to be 'Off Grid' in the future. When the gas oven is used on the Bi Energy cooker, again the consumption is just 25 watts.

All Glem Gas ovens have electric grills so electric power is required for grilling. We find that gas grills are unsuitable for Australian cooking styles where grilling lamb chops creates too much splatter for a gas grill.

GLEM

GLEM GAS Australasia
48 Percy Street, Auburn, NSW 2144
PO BOX 63 Blaxcell PO,
South Granville, NSW 2142
T: 1300 307 917
T: (02) 9721 2755
F: (02) 9721 2766
E: info@glemgas.com.au
W: www.emiliaglem.com.au

MADE IN ITALY 2 TWO YEAR WARRANTY

The descriptions and images in this brochure apply to the specific products at the date of publication. Glem Gas has a policy of continuous product development and product specifications may change without notice. Please check with the retailer that this brochure correctly describes the products that are being offered for sale. Glem Gas should not be held responsible for any errors in this brochure caused by inaccuracy in printing or transcription.

Warranty: Glem products are covered by a two year warranty, on parts and labour and conditional to our Warranty policy.

Service: Glem Gas has an Australia wide service network available. Call 02 9721 2755 for assistance.