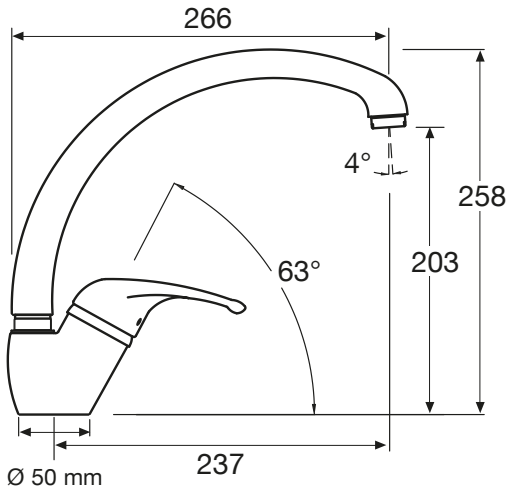MIXCX2