FORNI
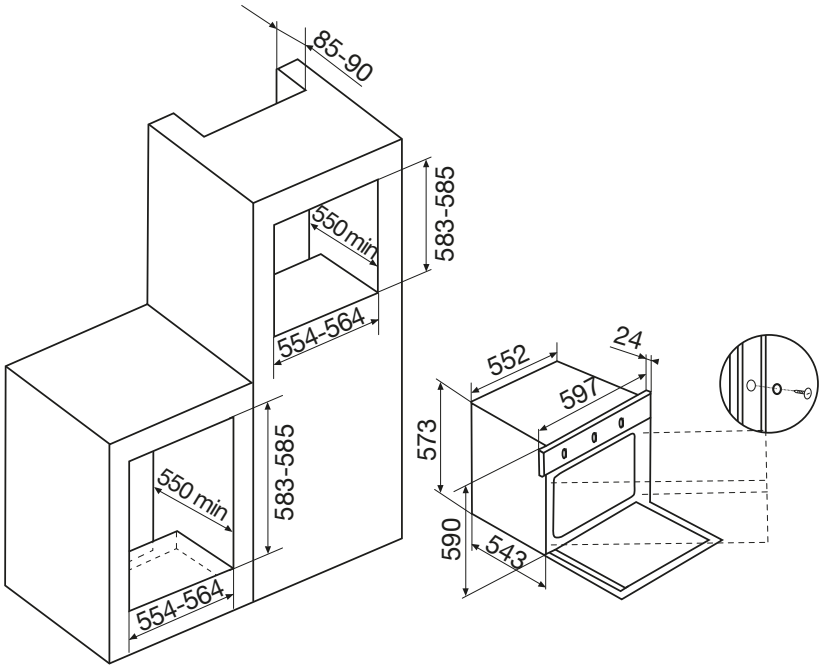
GFM52WHN