LAVELLI
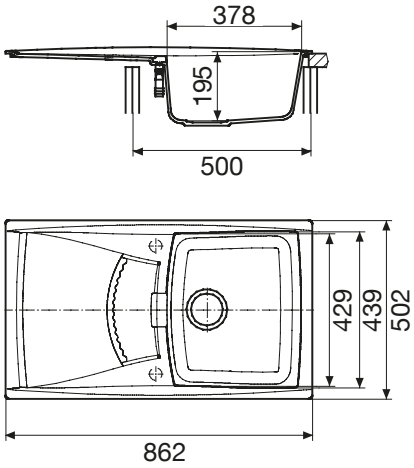
L1G86S