LAVELLI
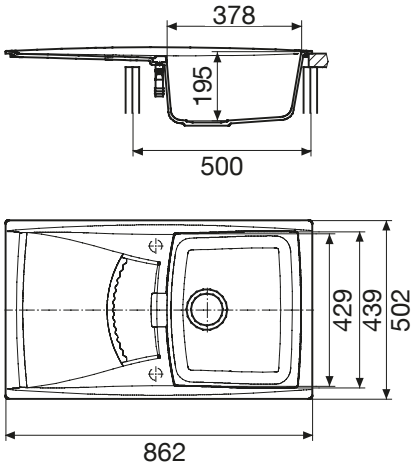
L1G86T