OVENS
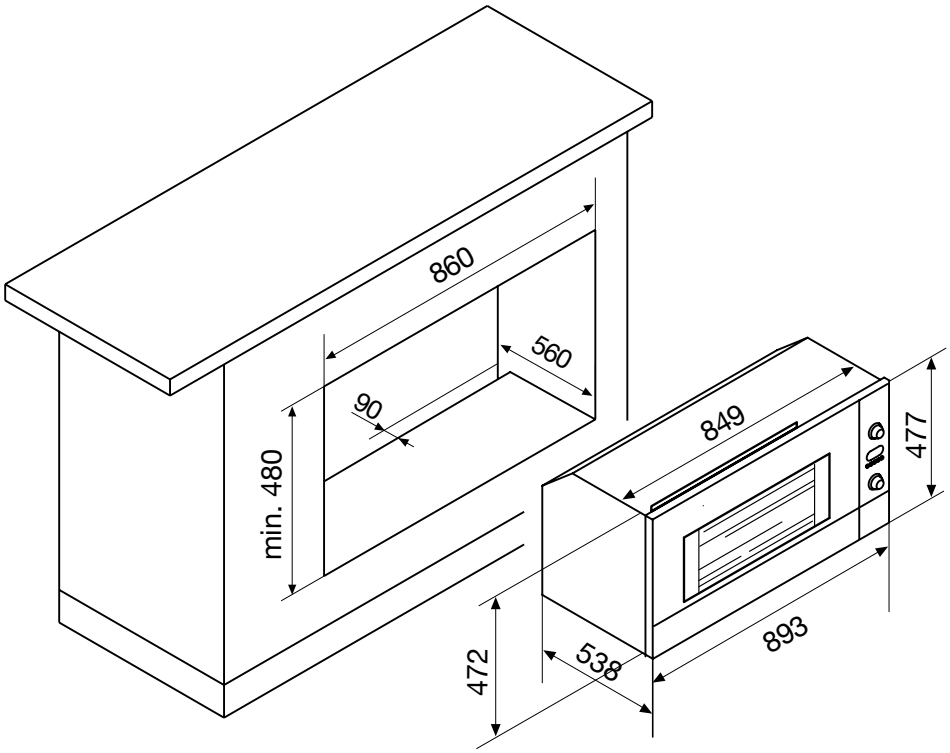
GF993IXN