OVEN
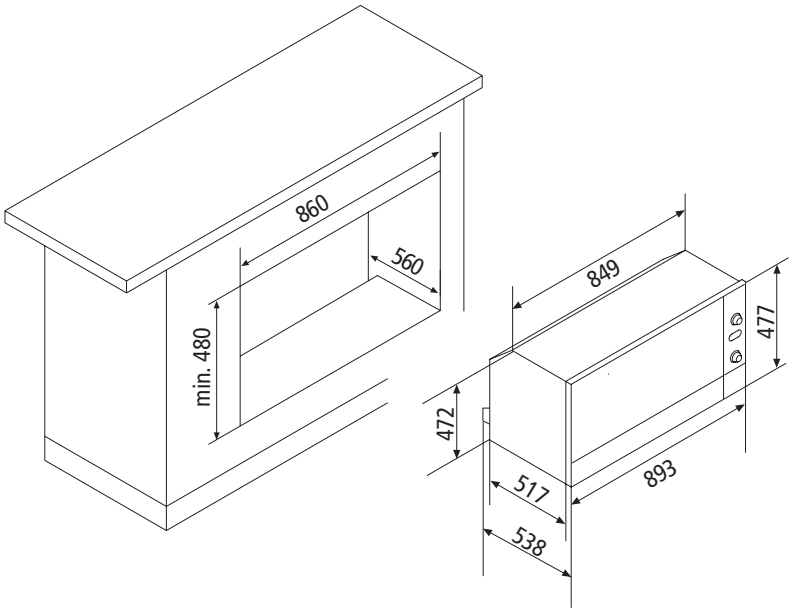
GF993IXN