OVENS
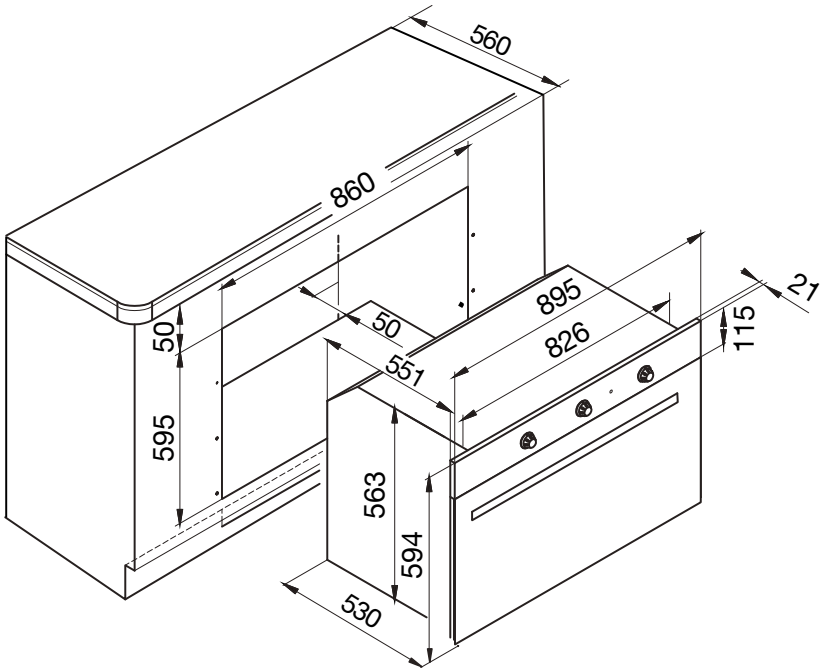
GF9F21IXN