OVENS
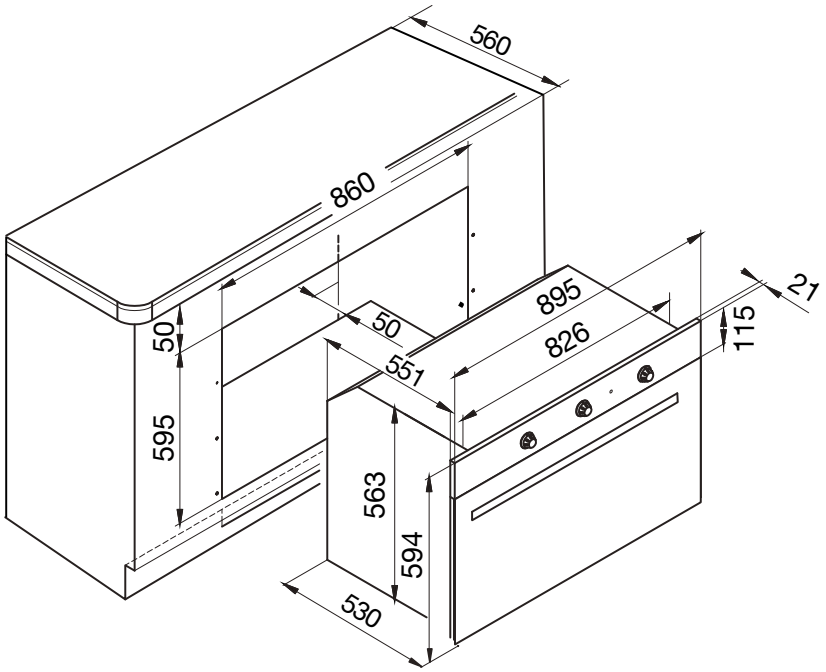
GF9G21BKN