OVEN
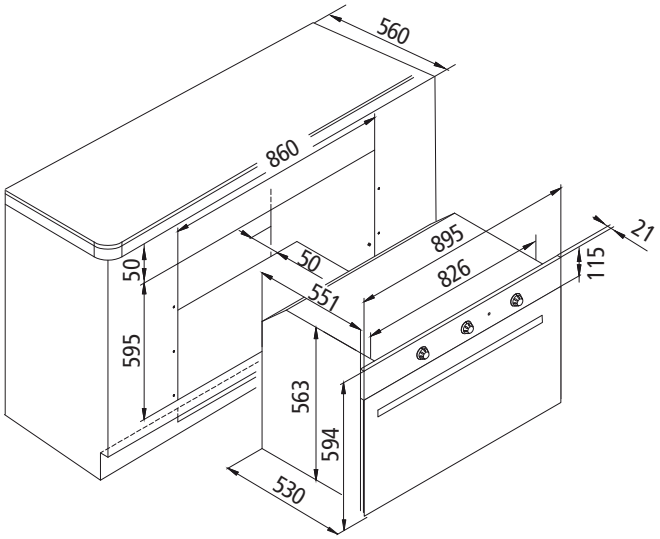
GF9G21IXN