## OVENS
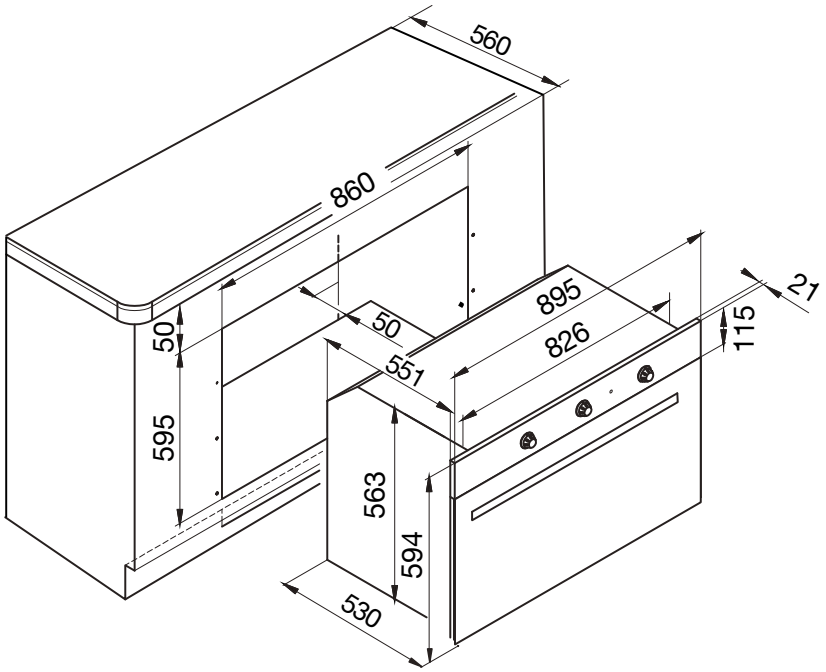
**GF9G21IXN**