OVEN
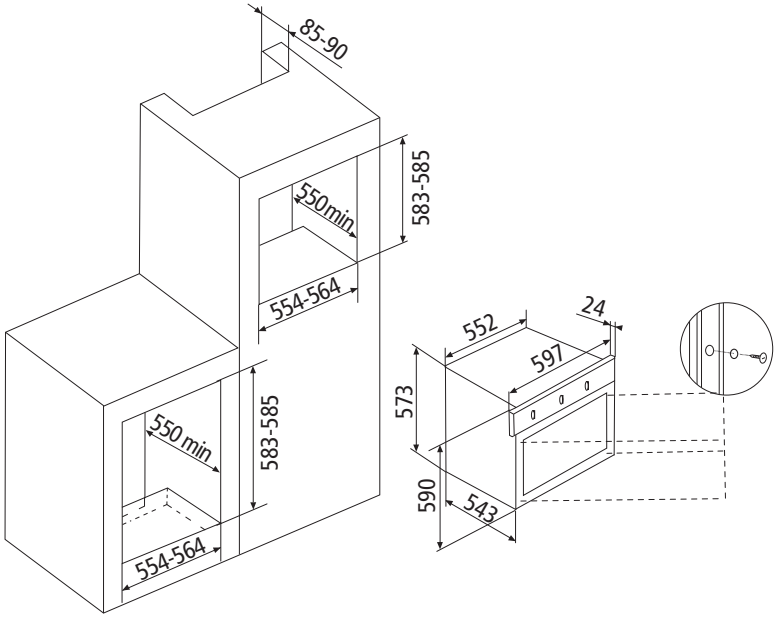
GFE52IX