OVEN
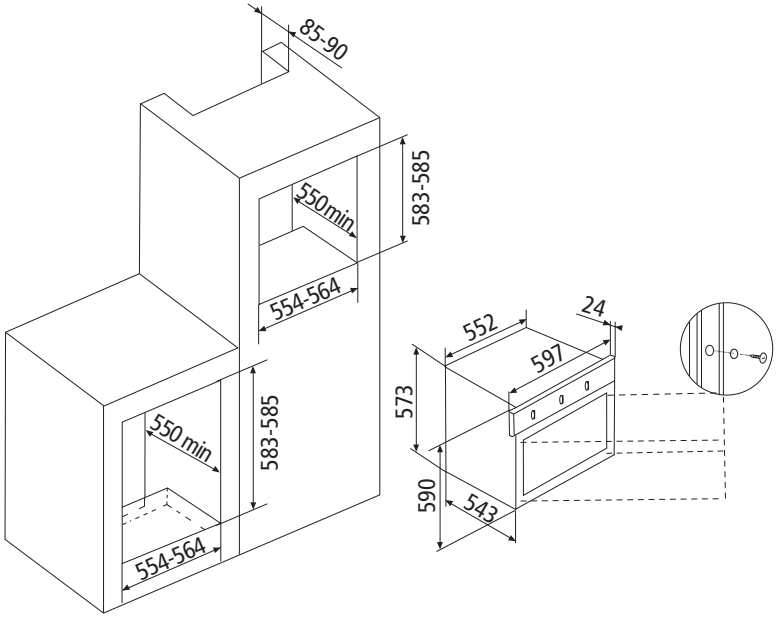
GFE92IX