OVEN
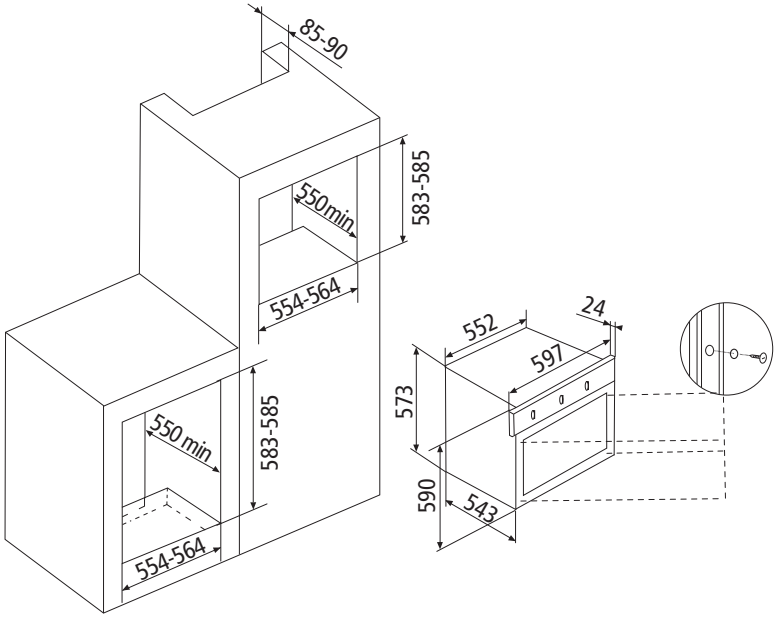
GFEG21IX