OVENS
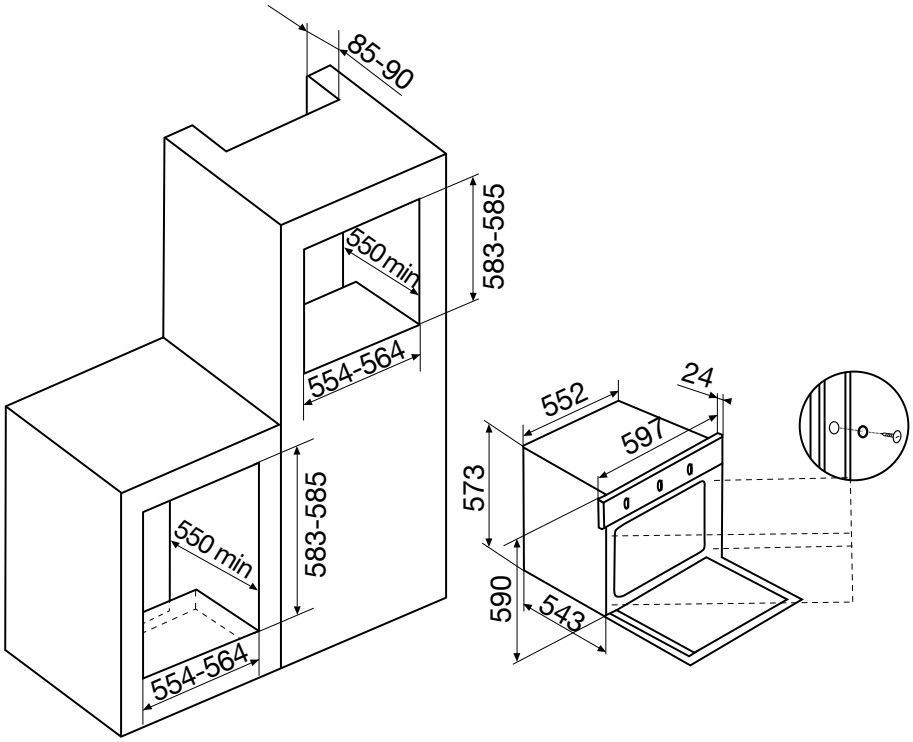
GFEV21IX