OVEN
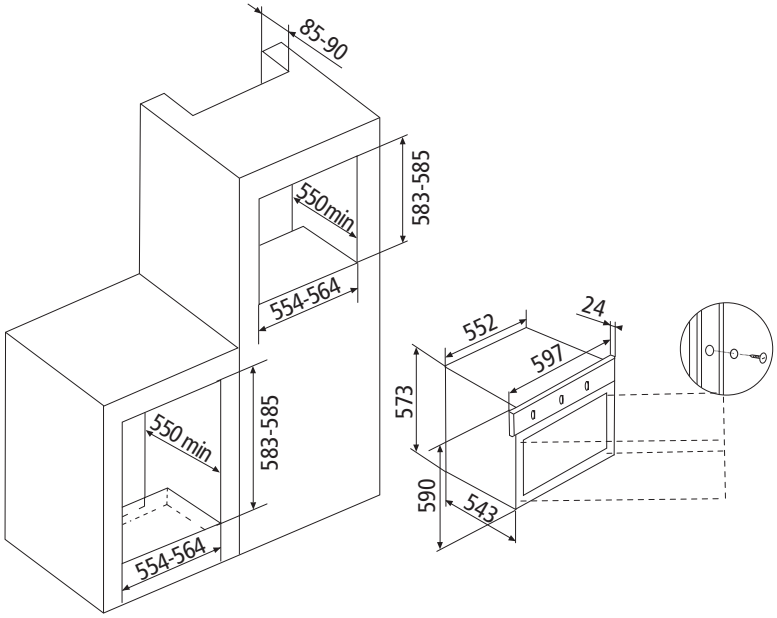
GFM52WH