OVEN
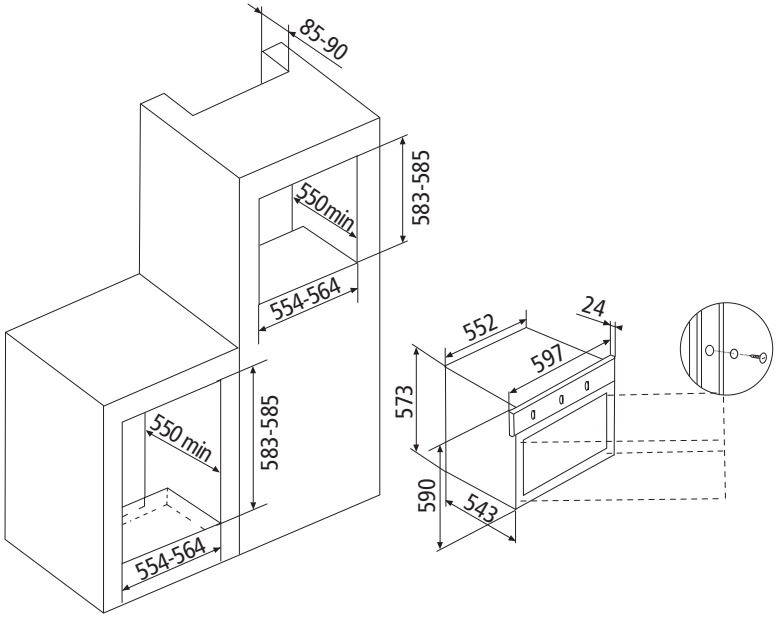
GFMF21BK