OVEN
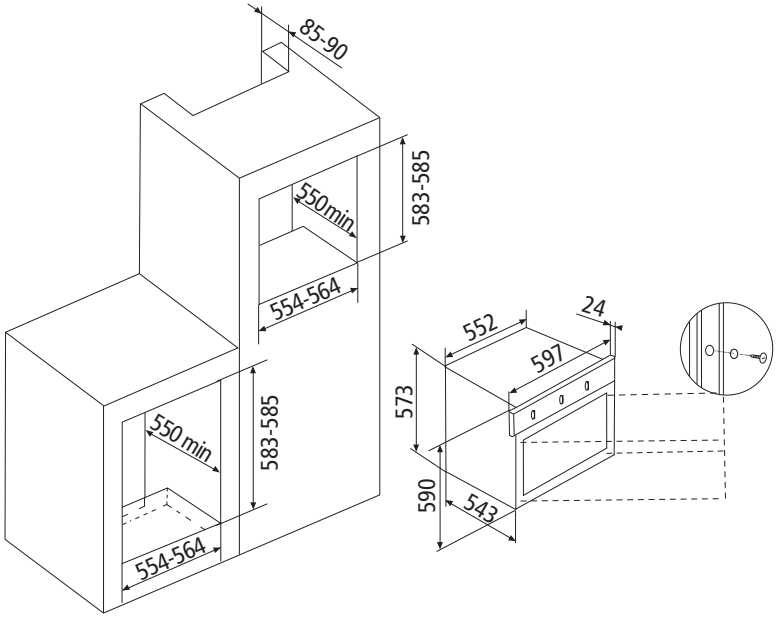
GFMF21IX