OVEN
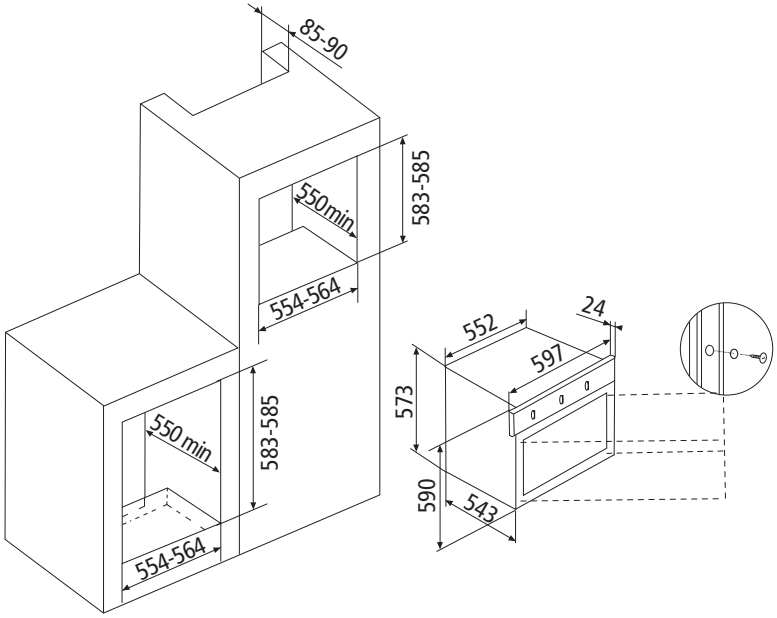
GFMF21WH