OVENS
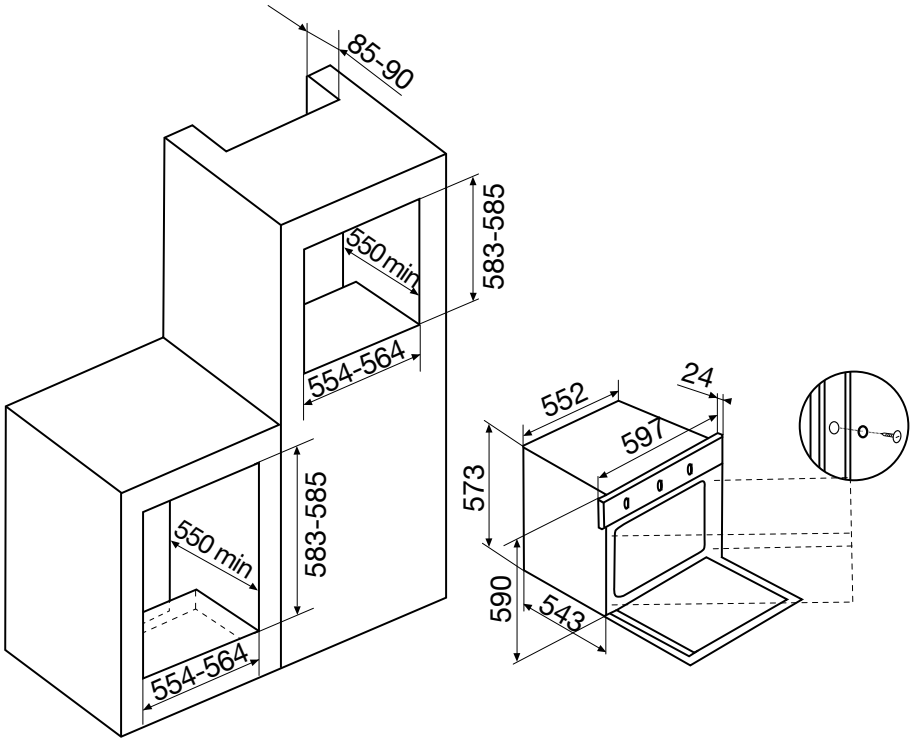
GFMF21WH