OVENS
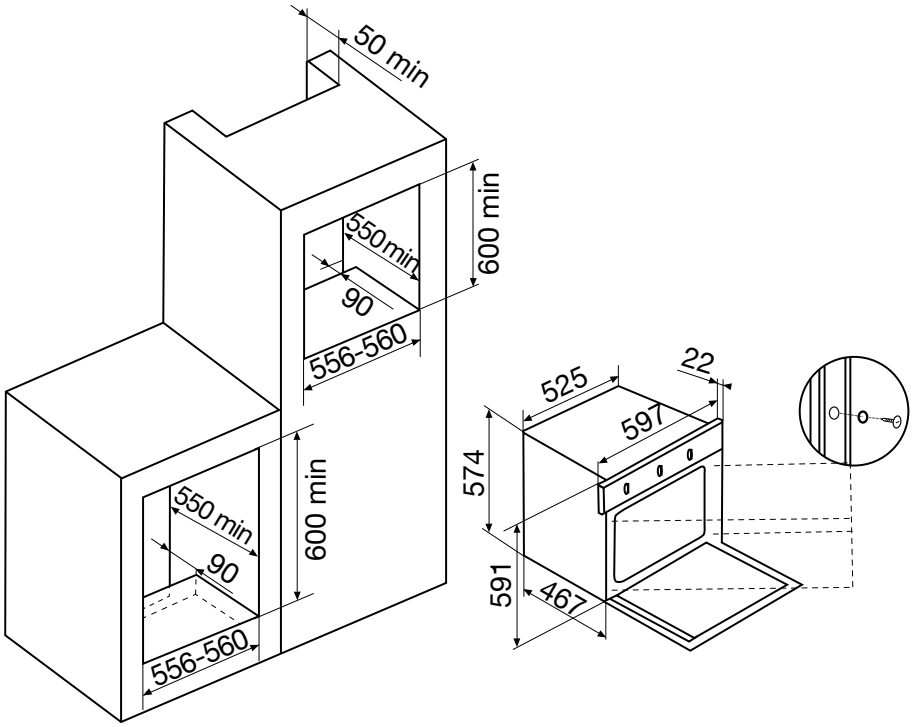
GFMG21BK