OVENS
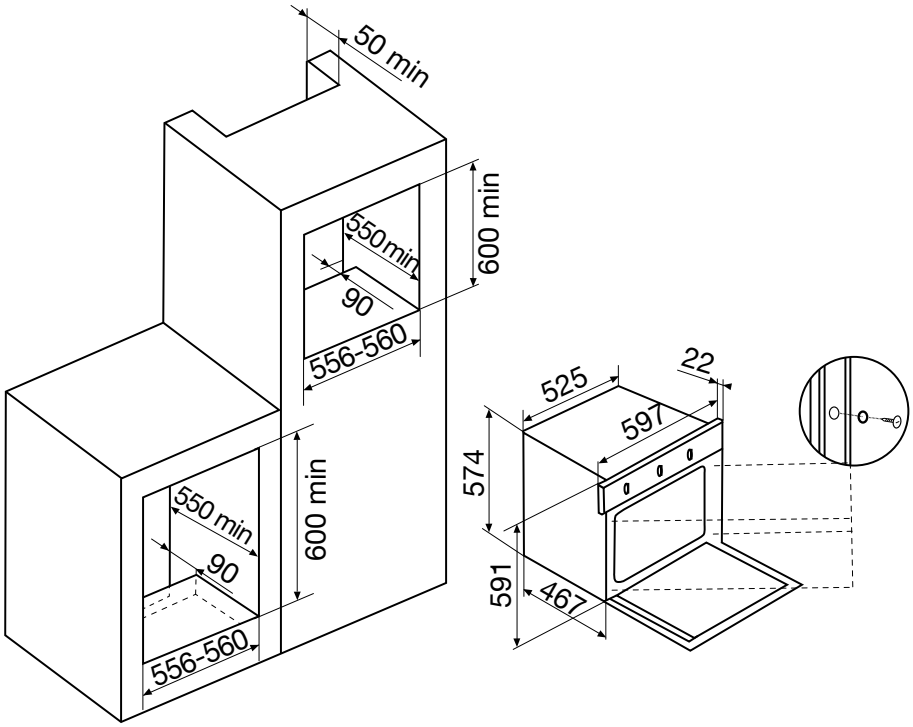
GFMG21IX