OVEN
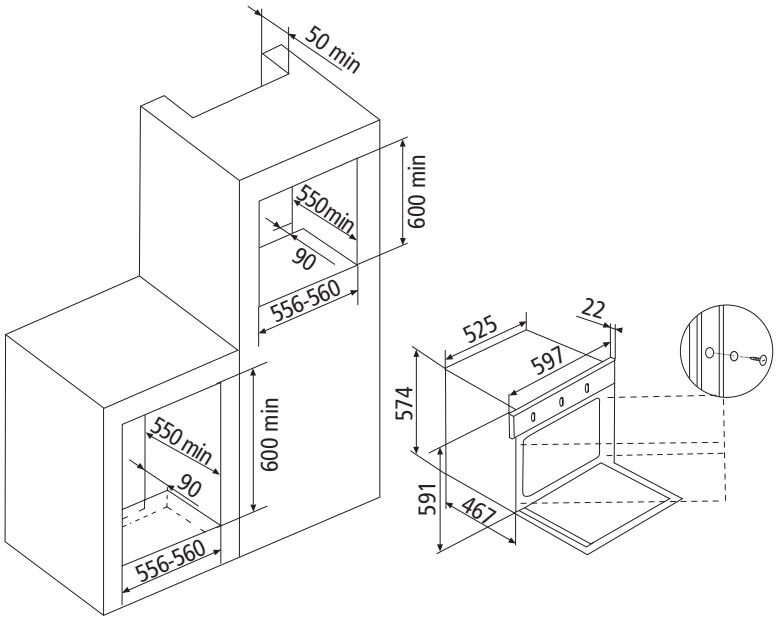
GFMG21WH