OVENS
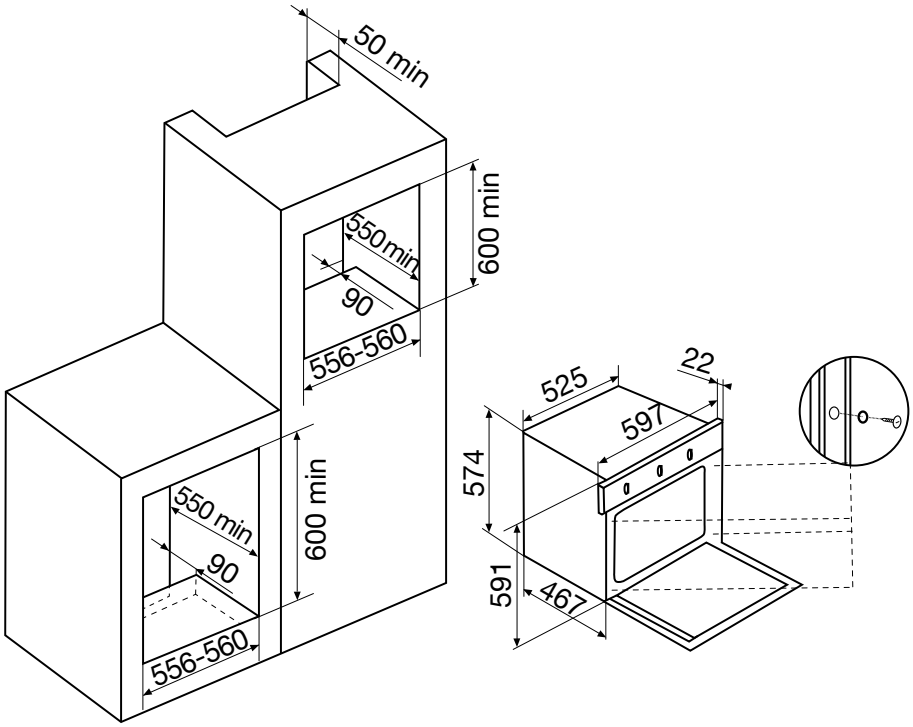
GFMG21WH