OVEN
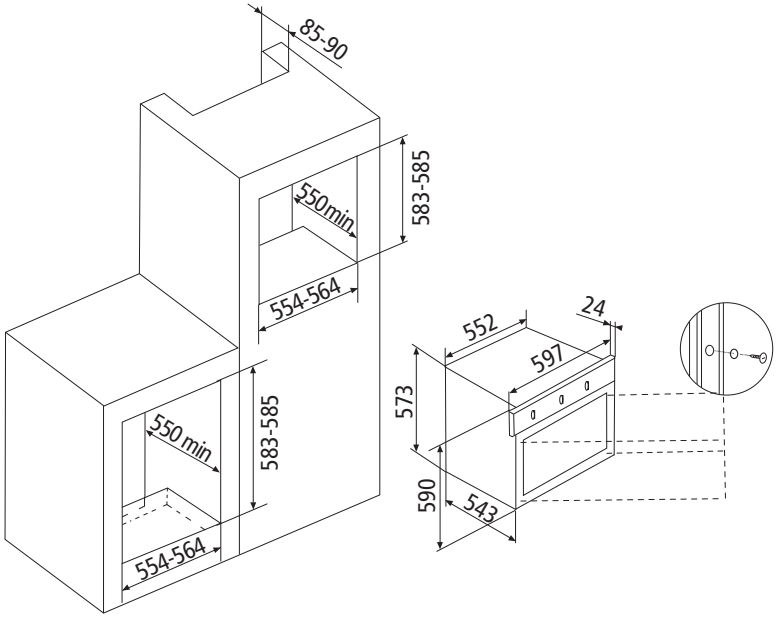
GFP93IX