OVEN
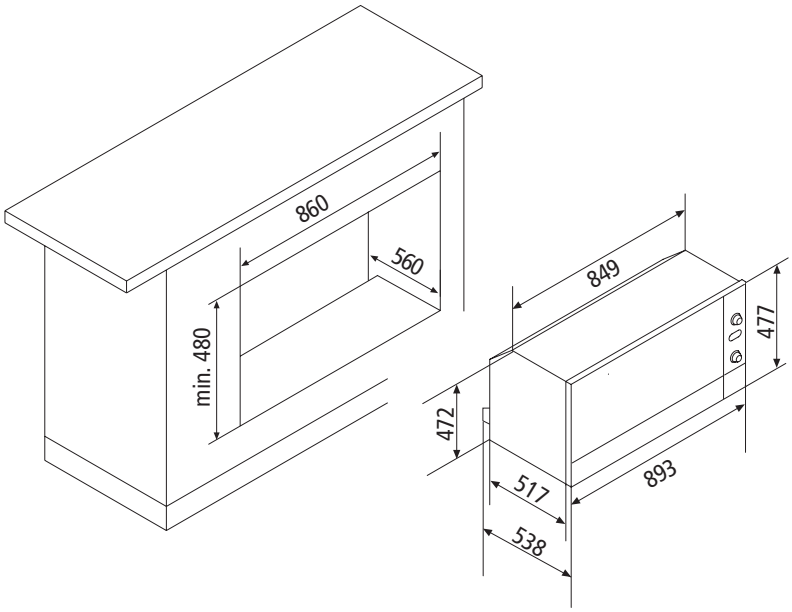
GFP993IX