OVEN
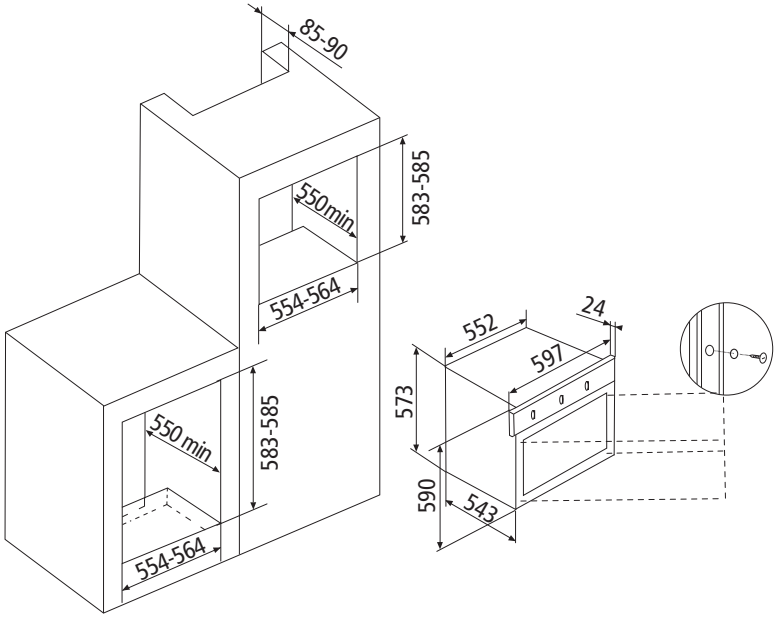
GFS53IX