OVEN
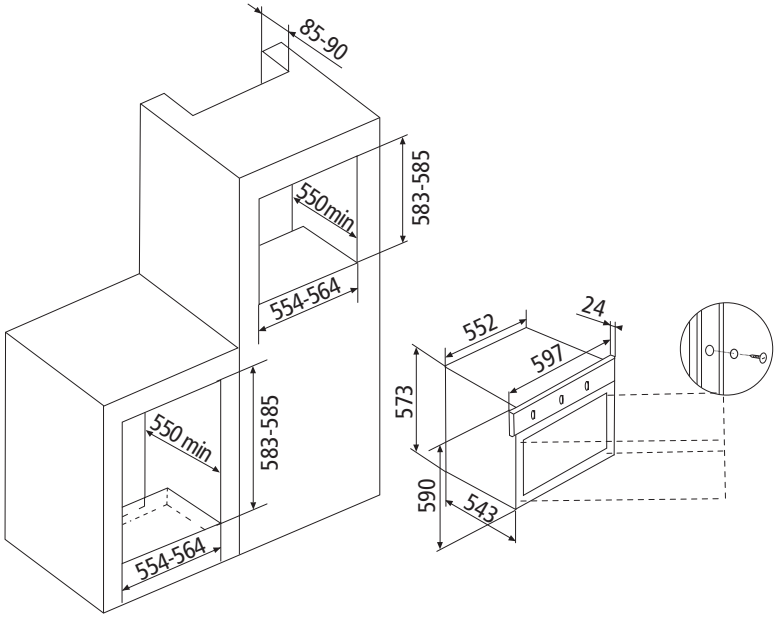
GFS92IX