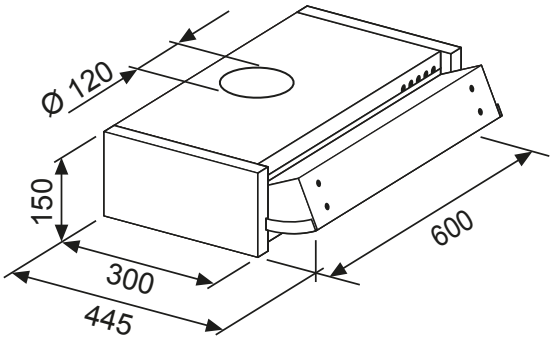GHE601SI