CAPPE
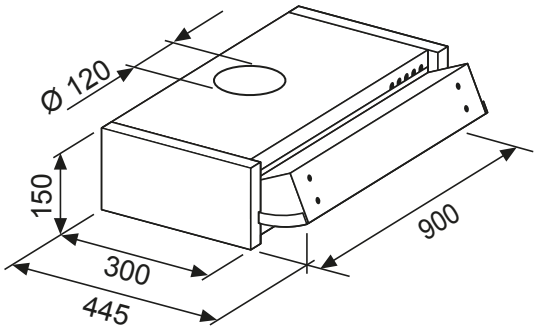
GHE901SI