HOOD
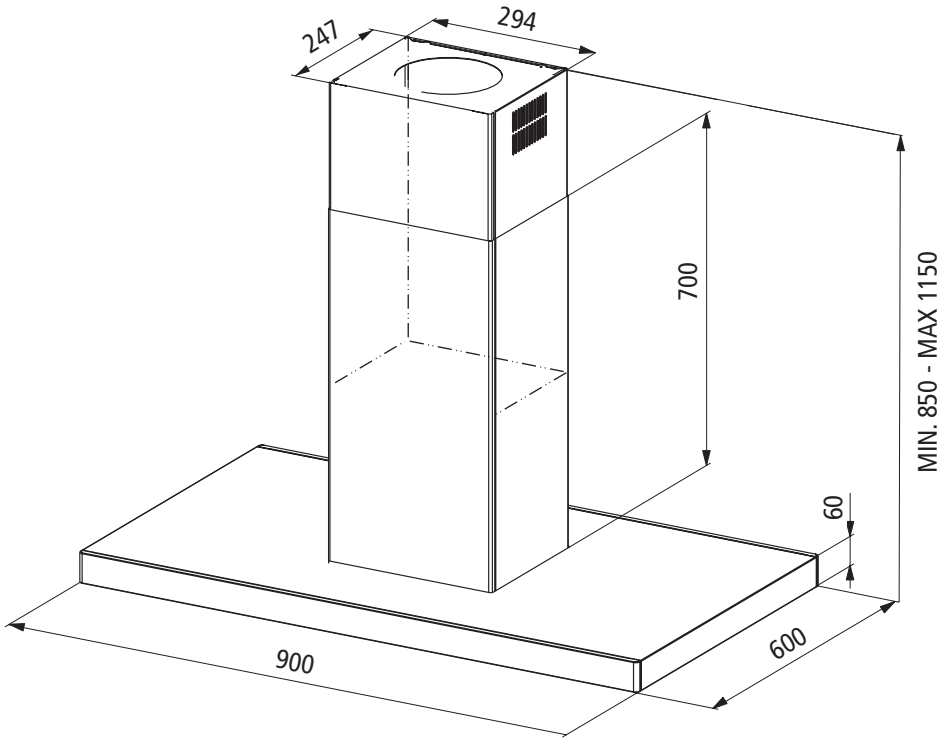
GHIB98IX