HOOD
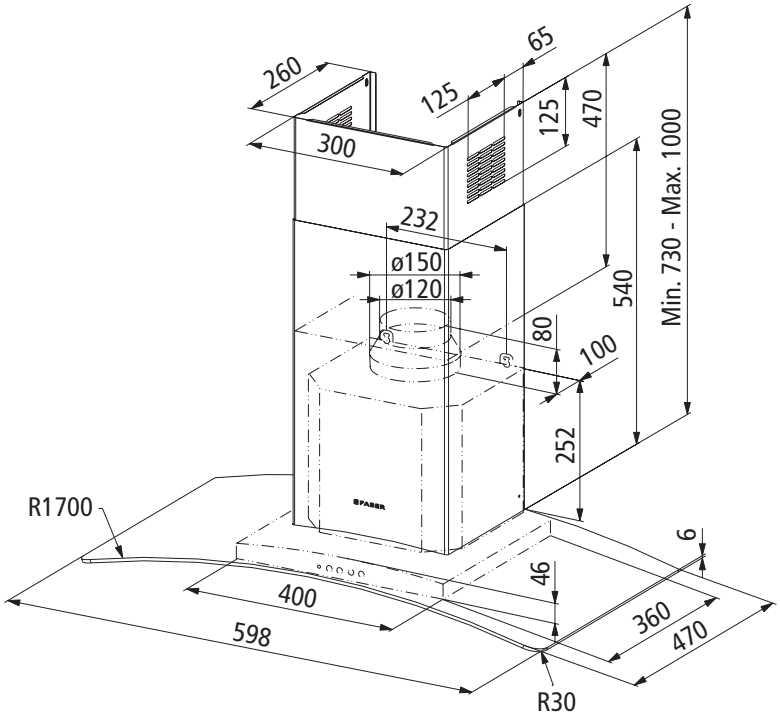
GHS68IX