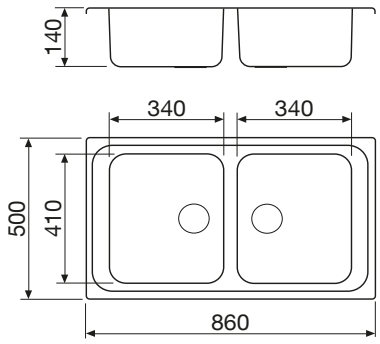GL286IX