GAS HOBS
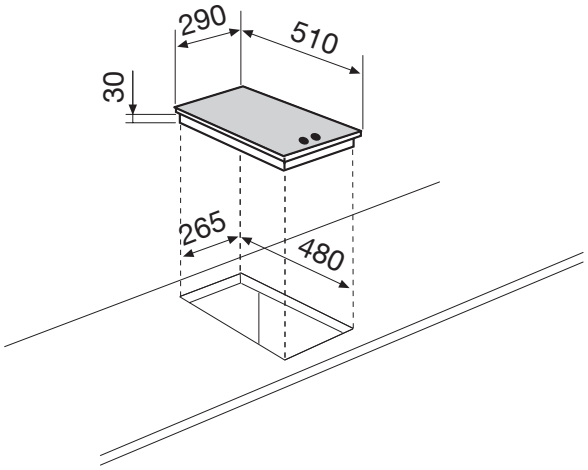
GT320IX