GAS HOBS
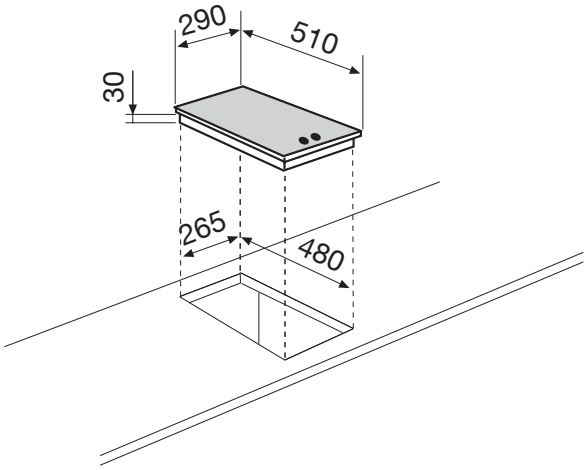
GT32IX