GAS HOBS
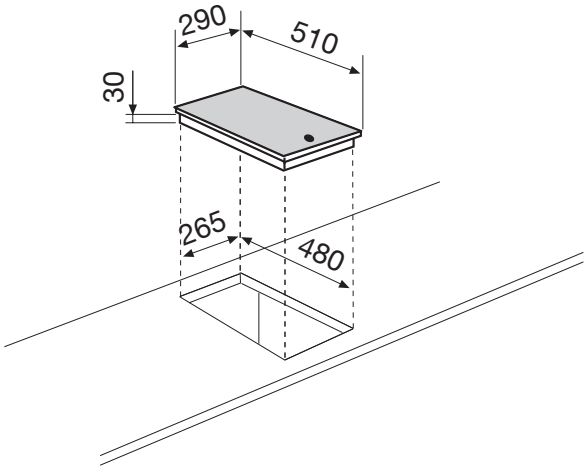
GT3BIX