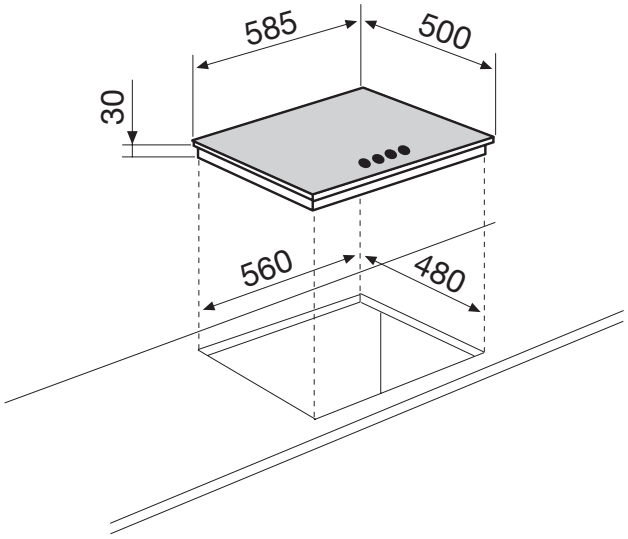60 cm