GAS HOBS
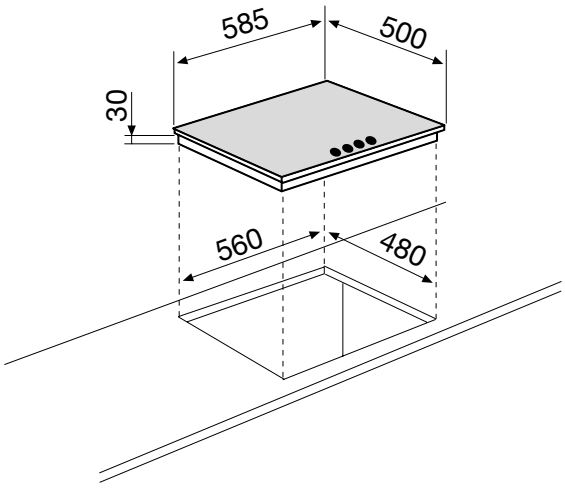
GT64BK