GAS HOB

GT64BK

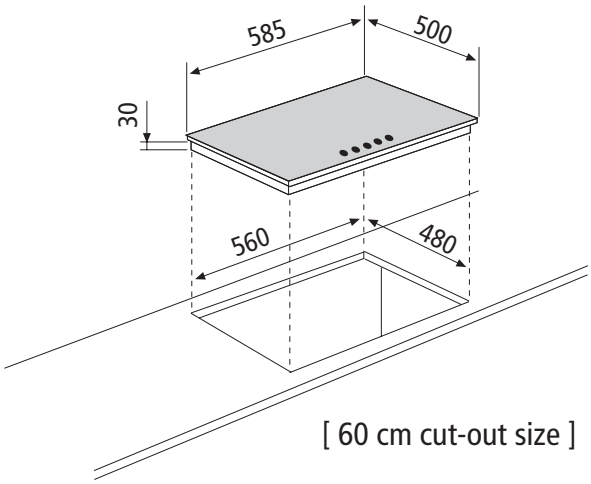

[60 cm cut-out size]