GAS HOBS
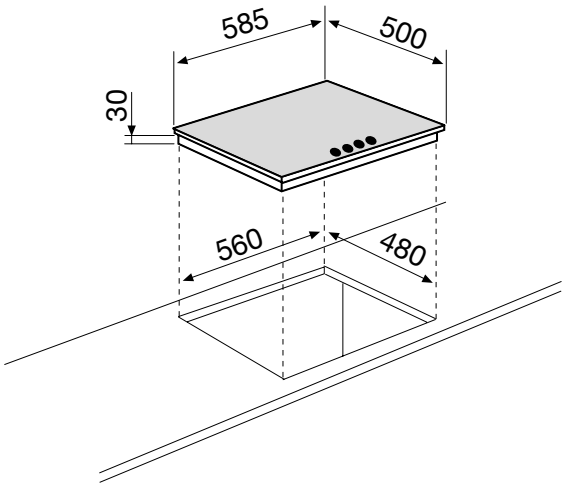
GT64HBK