GAS HOBS
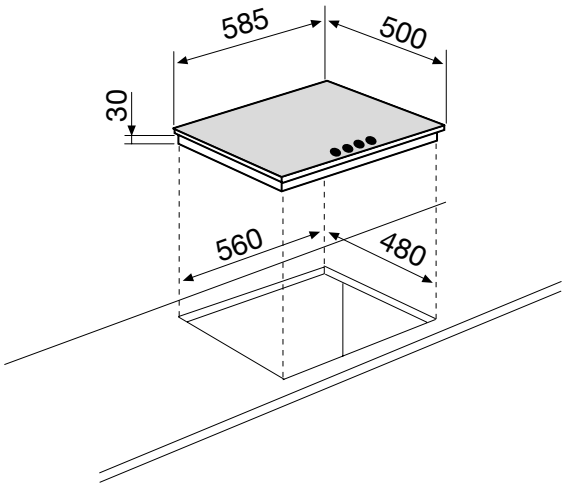
GT64HIX