GT755BK

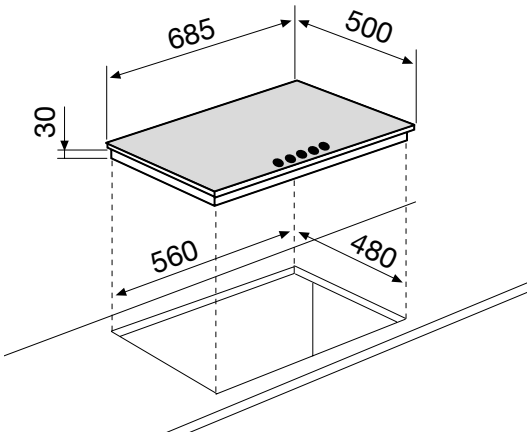

Standard cut-out size