GAS HOB

GT755BK

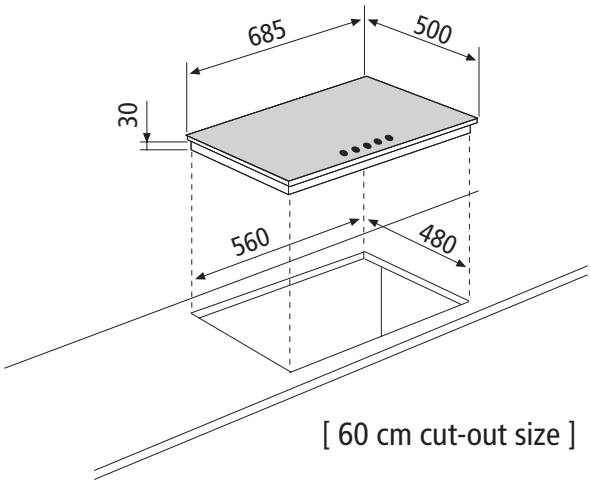

[60 cm cut-out size]