GAS HOB

GT755HBK

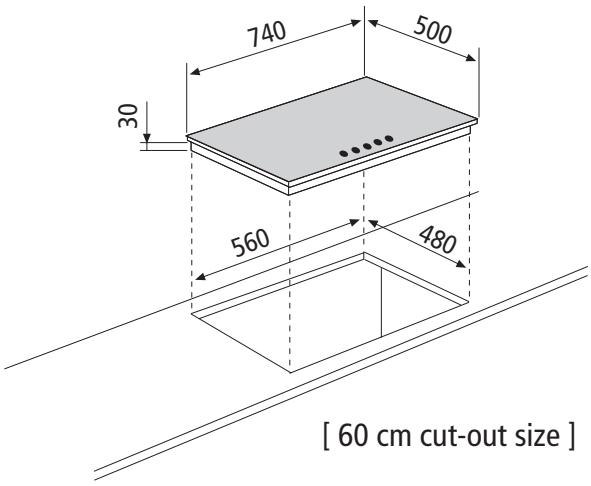

[60 cm cut-out size]