GAS HOBS

GT755HBK

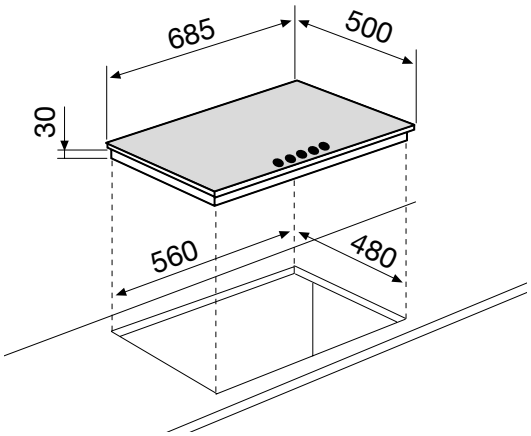

Standard cut-out size