GAS HOB

GT755HIX

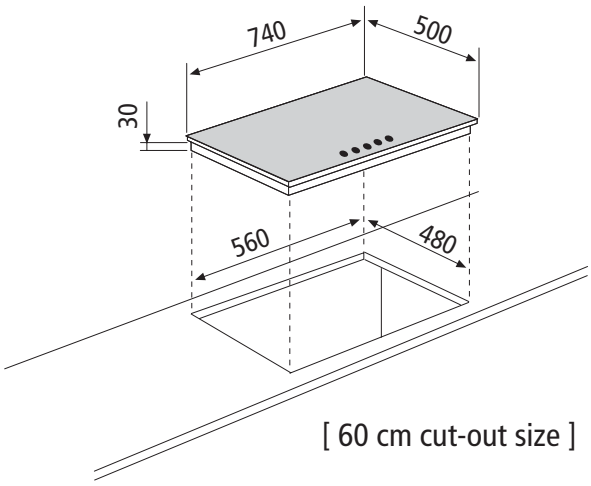

[60 cm cut-out size]